Technical Data

Original Instructions

1769 Compact I/O Modules Specifications

Catalog Numbers

Digital I/O Modules	1769-IA8I, 1769-IA8IK, 1769-IA16, 1769-IA16K, 1769-IM12, 1769-OA8, 1769-OA16, 1769-OA16K, 1769-IG16, 1769-IQ16, 1769-IQ16K, 1769-IQ16F, 1769-IQ32, 1769-IQ32K, 1769-IQ32T, 1769-IQ6XOW4, 1769-OB8, 1769-OB8K, 1769-OB16, 1769-OB16K, 1769-OB16P, 1769-OB32, 1769-OB32K, 1769-OB32T, 1769-OG16, 1769-OV16, 1769-OV32T
Contact I/O Modules	1769-OW8, 1769-OW8I, 1769-OW8IK, 1769-OW16, 1769-OW16K
Analog I/O Modules	1769-IF4, IF4K, 1769-IF4I, 1769-IF4XOF2, 1769-IF4XOF2K, 1769-IF4FXOF2F, 1769-IF8, 1769-IF8K, 1769-IF16C, 1769-IF16V, 1769-IR6, 1769-IT6, 1769-OF2, 1769-OF2K, 1769-OF4, 1769-OF4K, 1769-OF4CI, 1769-OF4VI, 1769-OF8C, 1769-OF8V
Specialty Modules	1769-ARM, 1769-ASCII, 1769-BOOLEAN, 1769-HSC, 1769-SM2
Accessories	1769-ECL, 1769-ECLK, 1769-ECR, 1769-ECRK, 1769-ECL, 1769-ECLK, 1769-ECR, 1769-ECRK, 1769-CLL1, 1769-CRR1, 1769-CRL1, 1769-CLL3, 1769-CRR3, 1769-CRL3

Topic	Page
Summary of Changes	2
I/O Module Overview	2
Environmental Specifications	2
Certifications	3
Place Compact I/O Modules	4
Digital I/O Modules	5
Contact I/O Modules	25
Analog I/O Modules	29
Specialty I/O Modules	53
Compact I/O Mounting Dimensions	61
Compact I/O Accessories	61
Wiring Systems	64
Additional Resources	65

The 1769 Compact I/O™ modules can be used in these applications:

- With a 1769 CompactLogix™ controller
- For expansion I/O in a MicroLogix™ 1500 controller assembly
- In an assembly with a 1769-ADN DeviceNet® adapter
- In an assembly with a 1769-AENTR Ethernet adapter

Unless connected to a MicroLogix 1500 base, each bank of I/O modules must include its own power supply.

Install the I/O modules on a panel with two mounting screws or on a DIN rail. The modules mechanically lock together with a tongue-and-groove design and have an integrated communication bus that is connected from module to module by a movable bus connector.

Summary of Changes

This publication contains the following new or updated information. This list includes substantive updates only and is not intended to reflect all changes.

Topic	Page
Added modules: 1769-IA16K, 1769-IA8IK, 1769-IF4K, 1769-IF4XOF2K, 1769-IF8K, 1769-IQ16K, 1769-IQ32K, 1769-OA16K, 1769-OB16K, 1769-OB32K, 1769-OB8K, 1769-OF2K, 1769-OF4K, 1769-OW16K, 1769-OW8IK, 1769-SM2	Throughout
Updated certifications	3

I/O Module Overview

Each I/O module includes a built-in removable terminal block with fingersafe cover for connections to I/O sensors and actuators. The terminal block is behind a door at the front of the module. I/O wiring can be routed from beneath the module to the I/O terminals.

- Once the modules are locked together, the system becomes a rugged assembly.
- Upper and lower tongue-and-groove slots guide the module during installation and attach the module to the system.
- Removable terminal blocks help ease the wiring task.
- Self-lifting, field-wire pressure plates cut installation time.
- The patented bus connector with the lock function enables consistent and system communication.
- A color bar is provided on the front of the module.
- Digital and field circuits are optically isolated.

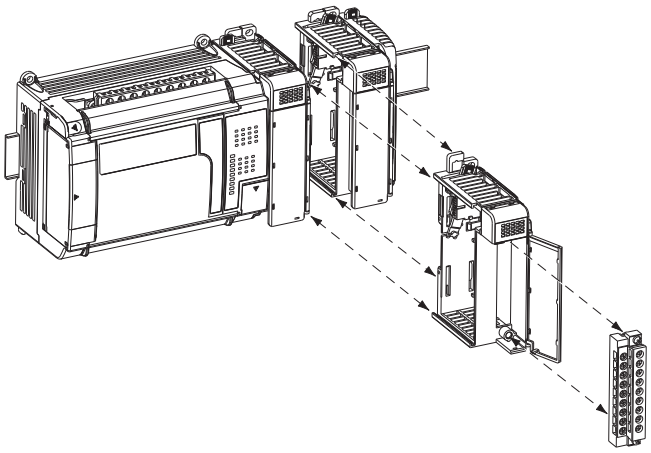

Environmental Specifications(1)

Attribute	1769-IA8I, 1769-IA8IK, 1769-IA16, 1769-IA16K, 1769-IF4, 1769-IF4K, 1769-IF4XOF2, 1769-IF4XOF2K, 1769-IM12, 1769-IQ16, 1769-IQ16K, 1769-IQ16F, 1769-IQ32, 1769-IQ32K, 1769-IQ6XOW4, 1769-IR6, 1769-IT6, 1769-OA8, 1769-OA16, 1769-OA16K, 1769-OB8, 1769-OB8K, 1769-OB16, 1769-OB16K, 1769-OB16P, 1769-OB32, 1769-OB32K, 1769-OV16, 1769-OW8, 1769-OW8I, 1769-OW8IK, 1769-OW16, 1769-OW16K, 1769-ARM, 1756-HSC	1769-IG16, 1769-IF4FXOF2F, 1769-IF4I, 1769-IF8, 1769-IF8K, 1769-IF16C, 1769-IF16V, 1769-IQ32T, 1769-OB32T, 1769-OG16, 1769-OV32T, 1769-OF2, 1769-OF2K, 1769-OF4, 1769-OF4K, 1769-OF4CI, 1769-OF4VI, 1769-OF8C, 1769-OF8V, 1769-ASCII, 1769-BOOLEAN
Temperature, operating IEC 60068-2-1 (Test Ad, Operating Cold), IEC 60068-2-2 (Test Bd, Operating Dry Heat), IEC 60068-2-14 (Test Nb, Operating Thermal Shock)	0...60 °C (32...140 °F)	
Temperature, nonoperating IEC 60068-2-1 (Test Allen-Bradley®, Unpackaged Nonoperating Cold), IEC 60068-2-2 (Test Bb, Unpackaged Nonoperating Dry Heat), IEC 60068-2-14 (Test Na, Unpackaged Nonoperating Thermal Shock)	-40...+85 °C (-40...+185 °F)	
Relative humidity IEC 60068-2-30 (Test Db, Unpackaged Nonoperating Damp Heat)	5...95% noncondensing	
Vibration IEC 60068-2-6 (Test Fc, Operating)	Operating: 5 g @ 10...500 Hz Relay operating: 2 g	5 g @ 10...500 Hz
Shock, operating IEC 60068-2-27 (Test Ea, Unpackaged Shock)	Panel mount 30 g DIN rail mount 20 g	
Shock, relay operating IEC 60068-2-27 (Test Ea, Unpackaged Shock)	Panel mount 7.5 g DIN rail mount 5 g	–
Shock, nonoperating IEC 60068-2-27 (Test Ea, Unpackaged Shock)	Panel mount 40 g DIN rail mount 30 g	

(1) Environmental Specifications for the 1769-SM2 module are found on page 60.

Certifications

Certifications - 1769 Compact I/O Digital and Contact Modules

Certification[1]	1769-IA8I, 1769-IA8IK, 1769-IA16, 1769-IA16K, 1769-OA8, 1769-OA16, 1769-OA16K, 1769-OW8, 1769-OW8I, 1769-OW8IK, 1769-OW16, 1769-OW16K	1769-IM12, 1769-IQ6XOW4	1769-IG16, 1769-IQ16, 1769-IQ16K, 1769-IQ16F, 1769-IQ32, 1769-IQ32K, 1769-IQ32T, 1769-OB8, 1769-OB8K, 1769-OB16, 1769-OB16K, 1769-OB16P, 1769-OB32, 1769-OB32K, 1769-OB32T, 1769-OG16, 1769-OV16, 1769-OV32T
c-UL-us	UL Listed for Class I, Division 2 Group A,B,C,D Hazardous Locations, certified for U.S. and Canada. See UL File E334470.		
UKCA and CE	UK Statutory Instrument 2016 No. 1101 and European Union 2014/35/EU LVD Directive, compliant with: EN 61131-2; Programmable Controllers (pertinent LVD sections only) UK Statutory Instrument 2016 No. 1091 and European Union 2014/30/EU EMC Directive, compliant with: EN 61000-6-2; Industrial Immunity EN 61000-6-4; Industrial Emissions UK Statutory Instrument 2012 No. 3032 and European Union 2011/65/EU RoHS Directive, compliant with: EN IEC 63000; Technical Documentation		UK Statutory Instrument 2016 No. 1091 and European Union 2014/30/EU EMC Directive, compliant with: EN 61000-6-2; Industrial Immunity EN 61000-6-4; Industrial Emissions UK Statutory Instrument 2012 No. 3032 and European Union 2011/65/EU RoHS, compliant with: EN IEC 63000; Technical Documentation
RCM	Australian Radiocommunications Act, compliant with: EN 61000-6-4; Industrial Emissions		
KC	Korean Registration of Broadcasting and Communications Equipment, compliant with: Article 58-2 of Radio Waves Act, Clause 3		
Morocco	Arrêté ministériel n° 6404-15 du 1 er muharram 1437 Arrêté ministériel n° 6404-15 du 29 ramadan 1436		

(1) When marked. See the Product Certification link at rok.auto/certifications for Declarations of Conformity, Certificates, and other certification details.

Certifications - 1769 Compact I/O Analog Modules

Certification[1]	1769-IF4, 1769-IF4K, 1769-IF4XOF2, 1769-IF4XOF2K, 1769-IF4FXOF2F, 1769-IF8, 1769-IF8K, 1769-OF2, 1769-OF2K	1769-IF4I, 1769-IT6, 1769-OF4CI, 1769-OF4VI, 1769-OF8C, 1769-OF8V	1769-IF16C, 1769-IF16V	1769-IR6	1769-OF4, 1769-OF4K
c-UL-us	UL Listed for Class I, Division 2 Group A,B,C,D Hazardous Locations, certified for U.S. and Canada. See UL File E334470.	UL Listed Industrial Control Equipment, certified for US and Canada. See UL File E65584. UL Listed for Class I, Division 2 Group A,B,C,D Hazardous Locations, certified for U.S. and Canada. See UL File E194810.	UL Listed Industrial Control Equipment, certified for US and Canada. See UL File E10314. UL Listed for Class I, Division 2 Group A,B,C,D Hazardous Locations, certified for U.S. and Canada. See UL File E10314.	UL Listed for Class I, Division 2 Group A,B,C,D Hazardous Locations, certified for U.S. and Canada. See UL File E194810.	UL Listed Industrial Control Equipment, certified for US and Canada. See UL File E322657. UL Listed for Class I, Division 2 Group A,B,C,D Hazardous Locations, certified for U.S. and Canada. See UL File E334470.
UKCA and CE	UK Statutory Instrument 2016 No. 1091 and European Union 2014/30/EU EMC Directive, compliant with: EN 61000-6-2; Industrial Immunity EN 61000-6-4; Industrial Emissions UK Statutory Instrument 2012 No. 3032 and European Union 2011/65/EU RoHS, compliant with: EN IEC 63000; Technical documentation				
RCM	Australian Radiocommunications Act, compliant with: EN 61000-6-4; Industrial Emissions				
KC	Korean Registration of Broadcasting and Communications Equipment, compliant with: Article 58-2 of Radio Waves Act, Clause 3				
Morocco	Arrêté ministériel n° 6404-15 du 1 er muharram 1437 Arrêté ministériel n° 6404-15 du 29 ramadan 1436				

(1) When marked. See the Product Certification link at rok.auto/certifications for Declarations of Conformity, Certificates, and other certification details.

Certifications - Specialty Modules

Certification[1]	1769-ARM, 1769-ASCII, 1769-BOOLEAN	1769-HSC	1769-SM2[2][3]
c-UL-us	UL Listed for Class I, Division 2 Group A,B,C,D Hazardous Locations, certified for U.S. and Canada. See UL File E334470.	UL Listed Industrial Control Equipment, certified for US and Canada. See UL File E322657. UL Listed for Class I, Division 2 Group A,B,C,D Hazardous Locations, certified for U.S. and Canada. See UL File E334470.	UL Listed Industrial Control Equipment, certified for US and Canada. See UL File E59272.
UKCA and CE	UK Statutory Instrument 2016 No. 1091 and European Union 2014/30/EU EMC Directive, compliant with: EN 61000-6-2; Industrial Immunity EN 61000-6-4; Industrial Emissions UK Statutory Instrument 2012 No. 3032 and European Union 2011/65/EU RoHS, compliant with: EN IEC 63000; Technical documentation		
RCM	Australian Radiocommunications Act, compliant with: EN 61000-6-4; Industrial Emissions		
KC	Korean Registration of Broadcasting and Communications Equipment, compliant with: Article 58-2 of Radio Waves Act, Clause 3		
Morocco	Arrêté ministériel n° 6404-15 du 1 er muharram 1437 Arrêté ministériel n° 6404-15 du 29 ramadan 1436		

(1) When marked. See the Product Certification link at rok.auto/certifications for Declarations of Conformity, Certificates, and other certification details.
(2) In a domestic environment, this product can cause radio interference in which case supplementary mitigation measures can be required.
(3) To remain CE, a ferrite core (Fair-Rite part number 2643102002) must be added to DSI communication cables longer than 10 m (33 ft.), and the core must be attached within 305 mm (12 in.) of the 1769-SM2 module.

Place Compact I/O Modules

You can DIN rail or panel mount the controller and I/O modules. The number of local I/O modules that are supported depends on the controller.

Controller	Supports	Location	Considerations
1769-L24ER-QB1B 1769-L24ER-QBFC1B 1769-L27ERM-QBFC1B	4 local modules	Right side of the controller	The additional modules are connected directly to the controller. There are no additional banks of local I/O.
1769-L30ER 1769-L30ERM 1769-L30ER-NSE	8 local modules	1 separate bank	Standard 1769 power supplies power the additional banks and connect to the main rack by using standard 1769 expansion cables.
1769-L33ER 1769-L33ERM	16 local modules	2 separate banks	
1769-L36ERM	30 local modules	3 separate banks	
1769-L23E-QB1B 1769-L23E-QBFC1B 1769-L23-QBFC1B	2 local modules, V17 and earlier	Right side of the packaged controller	The additional modules are connected directly to the packaged controller. There are no additional banks of local I/O.
1769-L23E-QB1B	3 local modules, v18 and later		
1769-L35CR 1769-L35E	30 local modules	3 separate banks	Standard 1769 power supplies power the additional banks and connect to the main rack by using standard 1769 expansion cables.
1769-L32C 1769-L32E 1769-L31	16 local modules	3 separate banks	
1768-L43	16 local modules	3 separate banks	As many as eight 1769 local modules can be attached to the 1768 backplane. The remaining modules can be in one or two additional I/O banks. Standard 1769 power supplies power the additional banks and connect to the main rack by using standard 1769 expansion cables.
1768-L45	30 local modules	3 separate banks	

Each 1769 Compact I/O module has a distance rating. In 1769 systems, the distance rating is the number of modules between the specific module and the 1769 power supply. In a 1768 system, the distance rating is the number of modules between the specific I/O module and the 1768 controller.

Contact I/O Modules

These contact modules are available.

I/O Type	Cat. No.	Description	Page
Contact	1769-OW8	Compact AC/DC relay contact module	26
	1769-OW8I, 1769-OW8IK	Compact AC/DC individually isolated, relay contact module	27
	1769-OW16, 1769-OW16K	Compact AC/DC relay contact module	28

1769-OW8

Compact AC/DC relay contact module

Simplified Output Circuit Diagram

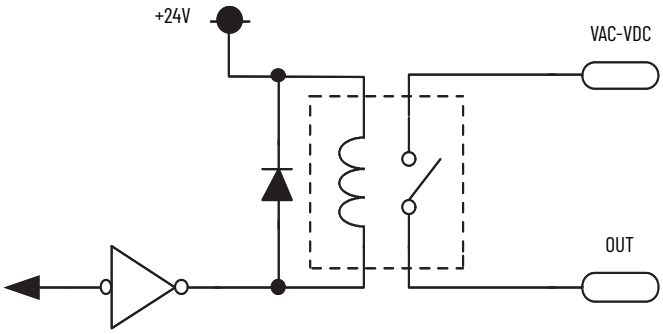

Output Wiring

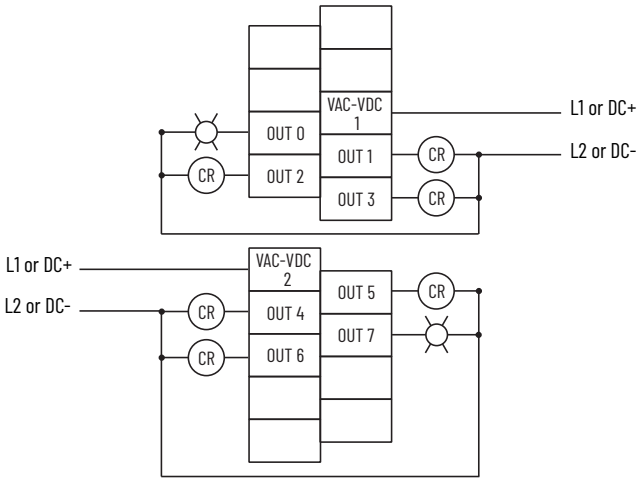

Technical Specifications - 1769-OW8

Attribute	1769-OW8
Outputs	8 normally open (4 points/group)
Operating voltage range	5...265V AC 5...125V DC
Delay, on	10 ms
Delay, off	10 ms
Current draw @ 5.1V	125 mA
Current draw @ 24V	100 mA
Heat dissipation, max	2.83 W
Off-state leakage, max	0 mA
On-state current, min	10 mA @ 5V DC
Current per point, max	2.5 A
Current per module, max	16 A

Technical Specifications - 1769-OW8

Attribute	1769-OW8
Isolation voltage	Verified by one of these dielectric tests: 1836V AC for 1 s or 2596V DC for 1 s, output point to bus and group to group 265V AC working voltage (IEC Class II reinforced insulation)
Weight, approx	280 g (0.61 lb)
Dimensions (HxWxD), approx	118 x 35 x 87 mm (4.65 x 1.38 x 3.43 in.) Height with mounting tabs 138 mm (5.43 in.)
Slot width	1
Module location	DIN rail or panel mount
Power supply	1769-PA2, 1769-PB2, 1769-PA4, 1769-PB4
Power supply distance rating	8 modules
Terminal screw torque	0.68 N•m (6 lb•in)
Retaining screw torque	0.46 N•m (4.1 lb•in)
Wire size	(22...14 AWG) solid (22...16 AWG) stranded
Wire type	Cu-90 °C (194 °F)
Replacement terminal block	1769-RTBN10 (1 per kit)
Replacement door label	1769-RL1 (2 per kit)
Replacement door	1769-RD (2 per kit)
Vendor ID code	1
Product type code	7
Product code	86
Enclosure type rating	None (open style)

Relay Contact Ratings - 1769-OW8

Volts, Max	Continuous Amps per Point, Max	Amperes(1)		Voltamperes		NEMA ICS 2-125
		Make	Break	Make	Break	
240V AC	2.5 A	7.5 A	0.75 A	1800VA	180VA	C300
120V AC		15 A	1.5 A			
125V DC	1.0 A	0.22 A(2)		28VA		R150
24V DC	2.0 A	1.2 A(2)		28VA		–

(1) If you connect surge suppressors across your external inductive load, you extend the life of the relay contacts.
(2) For DC voltage applications, you can determine the make/break ampere rating for relay contacts by dividing 28VA by the applied DC voltage. For example, 28VA/48V DC = 0.58 A. For DC voltage applications less than 48V, the make/break ratings for relay contacts cannot exceed 2 A.

For **Environmental Specifications**, see page 2.

For **Certifications**, see page 3.

1769-OW8I, 1769-OW8IK

Compact AC/DC individually isolated, relay contact module

Simplified Output Circuit Diagram

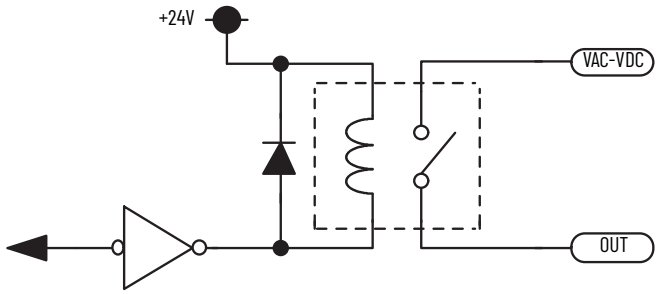

Output Wiring

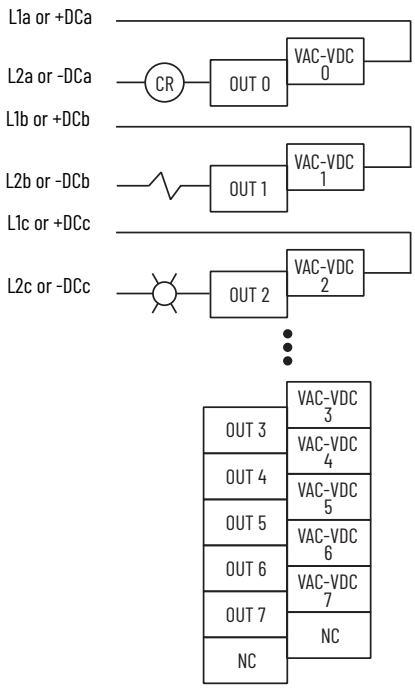

Technical Specifications - 1769-OW8I, 1769-OW8IK

Attribute	1769-OW8I, 1769-OW8IK
Outputs	8 normally open, individually isolated (4 points/group)
Operating voltage range	5...265V AC 5...125V DC
Delay, on	10 ms
Delay, off	10 ms
Current draw @ 5.1V	125 mA
Current draw @ 24V	100 mA

Technical Specifications - 1769-OW8I, 1769-OW8IK

Attribute	1769-OW8I, 1769-OW8IK
Heat dissipation, max	2.83 W
Off-state leakage, max	0 mA
On-state current, min	10 mA @ 5V DC
Current per point, max	2.5 A
Current per module, max	16 A
Isolation voltage	Verified by one of these dielectric tests: 1836V AC for 1 s or 2596V DC for 1 s, output point to bus 265V AC working voltage (IEC Class II reinforced insulation) Verified by one of these dielectric tests: 1836V AC for 1 s or 2596V DC for 1 s, group to group 265V AC working voltage (basic insulation) 150V AC working voltage (IEC Class II reinforced insulation)
Weight, approx	290 g (0.64 lb)
Dimensions (HxWxD), Approx	118 x 35 x 87 mm (4.65 x 1.38 x 3.43 in.) Height with mounting tabs 138 mm (5.43 in.)
Slot width	1
Module location	DIN rail or panel mount
Power supply	1769-PA2, 1769-PB2, 1769-PA4, 1769-PB4
Power supply distance rating	8 modules
Terminal screw torque	0.68 N•m (6 lb•in)
Retaining screw torque	0.46 N•m (4.1 lb•in)
Wire size	(22...14 AWG) solid (22...16 AWG) stranded
Wire type	Cu-90 °C (194 °F)
Replacement terminal block	1769-RTBN18 (1 per kit)
Replacement door label	1769-RL1 (2 per kit)
Replacement door	1769-RD (2 per kit)
Vendor ID code	1
Product type code	7
Product code	87
Enclosure type rating	None (open style)

Relay Contact Ratings - 1769-OW8I, 1769-OW8IK

Volts, Max	Continuous Amps per Point, Max	Amperes(1)		Voltamperes		NEMA ICS 2-125
		Make	Break	Make	Break	
240V AC	2.5 A	7.5 A	0.75 A	1800VA	180VA	C300
120V AC		15 A	1.5 A			
125V DC	1.0 A	0.22 A(2)		28VA		R150
24V DC	2.0 A	1.2 A(2)		28VA		–

(1) If you connect surge suppressors across your external inductive load, you extend the life of the relay contacts.
(2) For DC voltage applications, you can determine the make/break ampere rating for relay contacts by dividing 28VA by the applied DC voltage. For example, 28VA/48V DC = 0.58 A. For DC voltage applications less than 48V, the make/break ratings for relay contacts cannot exceed 2 A.

For **Environmental Specifications**, see page 2.

For **Certifications**, see page 3.

1769-OW16, 1769-OW16K

Compact AC/DC relay contact module

Simplified Output Circuit Diagram

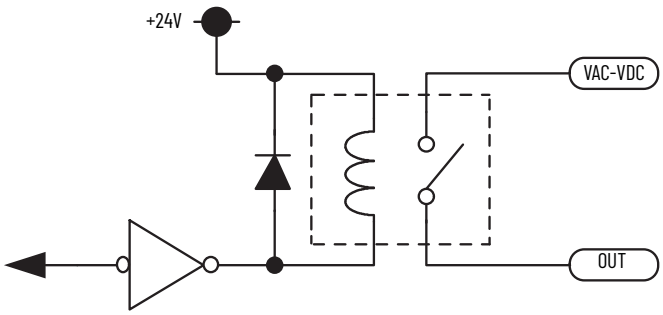

Output Wiring

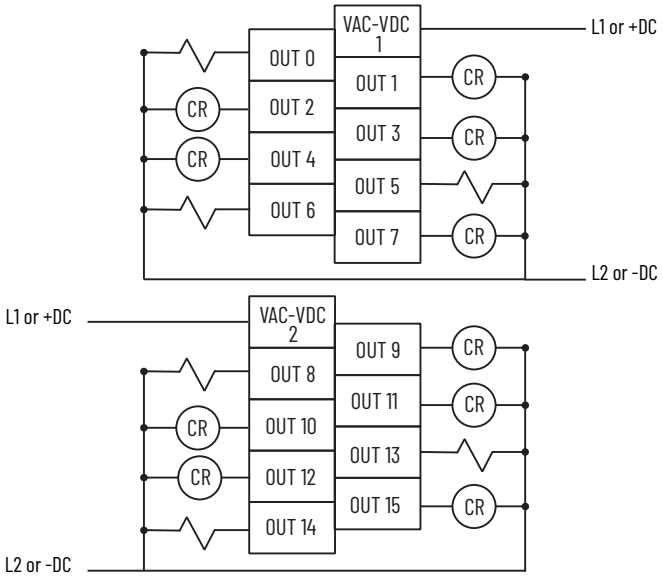

Technical Specifications - 1769-OW16, 1769-OW16K

Attribute	1769-OW16, 1769-OW16K
Outputs	16 normally open (8 points/group)
Operating voltage range	5...265V AC 5...125V DC
Delay, on	10 ms
Delay, off	10 ms
Current draw @ 5.1V	205 mA
Current draw @ 24V	180 mA

Technical Specifications - 1769-OW16, 1769-OW16K

Attribute	1769-OW16, 1769-OW16K
Heat dissipation, max	4.75 W
Off-state leakage, max	0 mA
On-state current, min	10 mA @ 5V DC
Current per point, max	2.5 A
Current per module, max	20 A
Isolation voltage	Verified by one of these dielectric tests: 1836V AC for 1 s or 2596V DC for 1 s, output point to bus 265V AC working voltage (IEC Class II reinforced insulation) Verified by one of these dielectric tests: 1836V AC for 1 s or 2596V DC for 1 s, group to group 265V AC working voltage (basic insulation) 150V AC working voltage (IEC Class II reinforced insulation)
Weight, approx	450 g (0.99 lb)
Dimensions (HxWxD), approx	118 x 52.5 x 87 mm (4.65 x 2.07 x 3.43 in.) Height with mounting tabs 138 mm (5.43 in.)
Slot width	1.5
Module location	DIN rail or panel mount
Power supply	1769-PA2, 1769-PB2, 1769-PA4, 1769-PB4
Power supply distance rating	8 modules
Terminal screw torque	0.68 N•m (6 lb•in)
Retaining screw torque	0.46 N•m (4.1 lb•in)
Wire size	(22...14 AWG) solid (22...16 AWG) stranded
Wire type	Cu-90 °C (194 °F)
Replacement terminal block	1769-RTBN18 (1 per kit)
Replacement door label	1769-RL1 (2 per kit)
Replacement door	1769-RD (2 per kit)
Vendor ID code	1
Product type code	7
Product code	85
Enclosure type rating	None (open style)

Relay Contact Ratings - 1769-OW16, 1769-OW16K

Volts, Max	Continuous Amps per Point, Max	Amperes(1)		Voltamperes		NEMA ICS 2-125
		Make	Break	Make	Break	
240V AC	2.5 A	7.5 A	0.75 A	1800VA	180VA	C300
120V AC		15 A	1.5 A			
125V DC	1.0 A	0.22 A(2)		28VA		R150
24V DC	2.0 A	1.2 A(2)		28VA		—

(1) If you connect surge suppressors across your external inductive load, you extend the life of the relay contacts.
(2) For DC voltage applications, you can determine the make/break ampere rating for relay contacts by dividing 28VA by the applied DC voltage. For example, 28VA/48V DC = 0.58 A. For DC voltage applications less than 48V, the make/break ratings for relay contacts cannot exceed 2 A.

For **Environmental Specifications**, see page 2.

For **Certifications**, see page 3.