PACSystems* RX3i and Series 90-30

IC694MDL930 / IC693MDL930

GFK-2705C
May 2015

Output Module, Isolated Relay, NO, 4 Amp, 8 Point

The MDL930 Series 90*-30 and PACSystems* ***4 Amp Isolated Relay Output*** modules, provide eight normally open relay circuits for controlling output loads. The output switching capacity of each circuit is 4 Amps. Each output point is isolated from the other points, and each point has a separate common power output terminal. The relay outputs can control a wide range of output devices, such as motor starters, solenoids, and indicators.

Individual numbered LEDs display the ON/OFF status of each output point. There are no fuses on this module. The red bands on the label show that MDL930 is a high-voltage module.

This module can be installed in any I/O slot in a Series 90-30 or RX3i system.

The user must supply the AC or DC power to operate the field devices connected to this module.

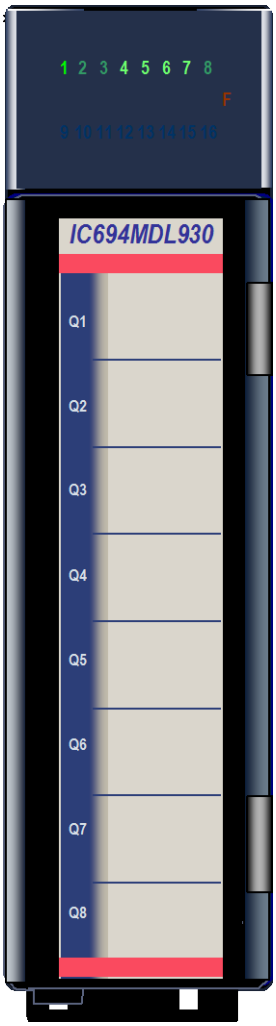

Caution

This module is not compatible with hot swap operations in any backplane. Hot removing or inserting this module into a backplane can cause damage to the module or other system components.

Related Documents

For product standards, general operating specifications and installation requirements refer to:

RX3i:	*PACSystems RX3i System Manual (GFK-2314)*
Series 90-30:	*Series 90-30 PLC Installation and Hardware Manual (GFK-0356)* *Installation Requirements for Conformance to Standards (GFK-1179)*

© 2015 General Electric Company. All Rights Reserved.
* Indicates a trademark of General Electric Company and/or its subsidiaries. All other trademarks are the property of their respective owners.

Specifications

Rated Voltage	24 volts DC, 120/240 VAC (nominal - see the following table for exceptions)
Operating Voltage	5 to 30 volts DC
	5 to 250 VAC, 50/60 Hz
Outputs per Module	Eight isolated outputs
Isolation:	
Field to Backplane and to Frame Ground	250 VAC continuous; 1500 VAC for 1 minute
Point to Point	250 VAC continuous; 1500 VAC for 1 minute
Maximum Load	4 Amps resistive maximum per output
	2 Amps pilot duty per output
	20 Amps maximum per module for UL installations Maximum Load depends on the ambient temperature as shown below
Minimum Load	10mA
Maximum Inrush	5 Amps
On Response Time	15ms maximum[1]
Off Response Time	15ms maximum[1]
Power Consumption	6mA (all outputs on) from 5 volt bus on backplane
	70mA (all outputs on) from relay 24V bus on backplane

[1] When this module is used with DC power supply IC695PSD040 or PSD140, special precautions should be taken because dropouts in the source voltage will be seen by this module and may cause relay dropouts.

Load Current vs. Temperature

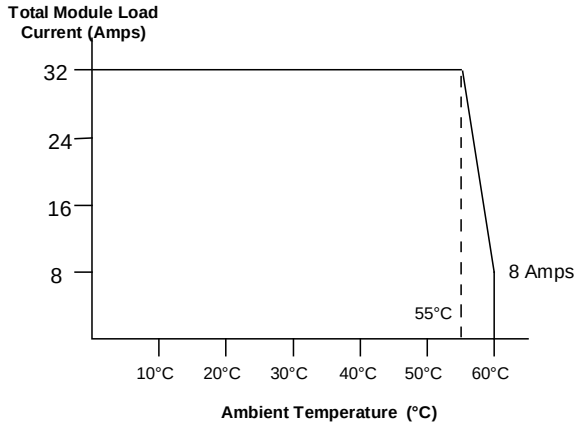

Load Current Limitations

Operating Voltage	Maximum Current for Load Type		Typical Contact Life (Number of Operations)
	Resistive	Lamp or Solenoid[2]	
24 to 120 VAC	4 Amps	2 Amps	150,000
24 to 120 VAC	1 Amp	0.5 Amp	500,000
24 to 120 VAC	0.1 Amp	0.05 Amp	1,000,000
240 VAC	4 Amps	2 Amps	50,000
240 VAC	0.1 Amp	0.05 Amp	500,000
240 VAC	1 Amp	0.5 Amp	200,000
24 VDC	4 Amps	2 Amps	100,000
24 VDC	1 Amp	0.5 Amp	500,000
24 VDC	0.1 Amp	0.05 Amp	1,000,000
125 VDC	0.2 Amp	0.1 Amp	300,000

[2] Assumes a 7ms time constant

Relay contact life, when switching inductive loads, will approach resistive load contact life if suppression circuits are used. Examples of typical suppression circuits for AC and DC loads are shown below. The 1A, 200V diode shown in the DC load typical suppression example is an industry standard 1N4935. The resistor and capacitor shown for AC load suppression are standard components, available from most electronics distributors.

Load Suppression Examples for Output Module MDL930

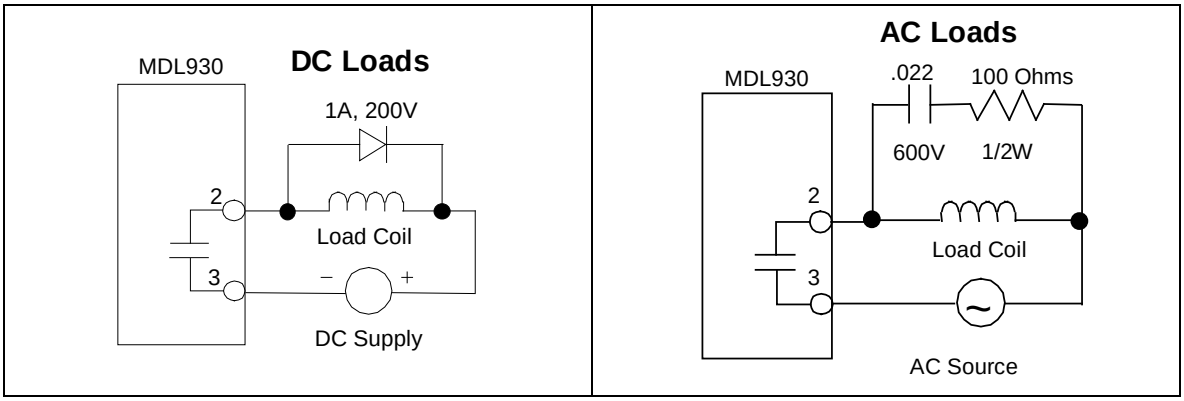

General Installation Requirements

This product is intended for use with the Series 90-30 or RX3i system. Its components are considered open equipment [having live electrical parts that may be accessible to users] and must be installed in an ultimate enclosure that is manufactured to provide safety. As a minimum, the enclosure shall provide a degree of protection against solid objects up to 12mm (e.g. fingers). This equates to a NEMA/UL Type 1 enclosure or an IP20 rating (IEC60529) providing at least a pollution degree 2 environment.

Installation in Hazardous Areas

The system containing the MDL930 module must be mounted within an ultimate enclosure that can be accessed only by the use of a tool.

The following information is for products bearing the UL marking for Hazardous Locations or ATEX marking for explosive atmospheres:

- EQUIPMENT LABELED WITH REFERENCE TO CLASS I, GROUPS A, B, C & D, DIV. 2 HAZARDOUS AREAS IS SUITABLE FOR USE IN CLASS I, DIVISION 2, GROUPS A, B, C, D OR NON-HAZARDOUS AREAS ONLY
- WARNING - EXPLOSION HAZARD - SUBSTITUTION OF COMPONENTS MAY IMPAIR SUITABILITY FOR CLASS I, DIVISION 2;
- WARNING - EXPLOSION HAZARD - WHEN IN HAZARDOUS AREAS, TURN OFF POWER BEFORE REPLACING OR WIRING MODULES; AND
- WARNING - EXPLOSION HAZARD - DO NOT DISCONNECT EQUIPMENT UNLESS POWER HAS BEEN SWITCHED OFF OR THE AREA IS KNOWN TO BE NONHAZARDOUS.

LEDs

Individual numbered LEDs display the ON/OFF status of each output point.

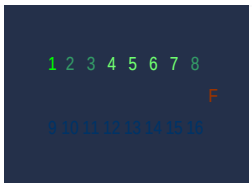

Module Data

The module receives 8 bits of output data from the host controller CPU. The starting location of this data is selected using the Proficy* Machine Edition configuration tool.

Field Wiring

Terminal	*Connection*
1	No connection
2	Output 1-1
3	Output 1-2
4	Output 2-1
5	Output 2-2
6	Output 3-1
7	Output 3-2
8	Output 4-1
9	Output 4-2
10	No connection
11	No connection
12	Output 5-1
13	Output 5-2
14	Output 6-1
15	Output 6-2
16	Output 7-1
17	Output 7-2
18	Output 8-1
19	Output 8-2
20	No connection

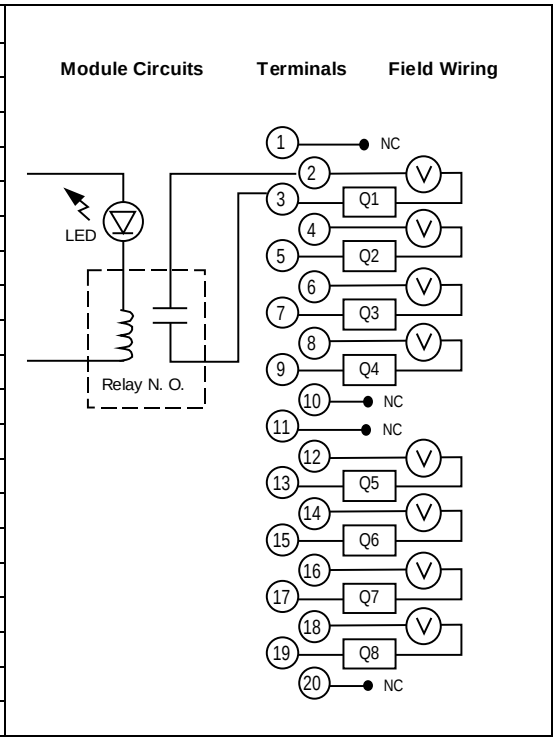

Screw terminals accept two copper wires in the range AWG #22 (0.36 mm^2) to AWG #16 (1.3 mm^2), or one AWG #14 (2.1 mm^2) copper 90°C (194°F) wire. Each terminal can accept solid or stranded wires, but the wires into any given terminal must be the same type (both solid or both stranded) and the same size. Screw torque is from 9.6 in-lbs to 11.5 in-lbs (1.1 to1.3 Newton-meters).

Release History

Version	*Date*	*Description*
IC693MDL930L	May 2015	Change in fab color from Green to Blue. No change in form-fit-functionality.
IC694 MDL930C	Jan 2015	Updated modules are RoHS converted product with applicable exemptions.
IC693/IC694 MDL930A	Aug. 2008	Initial release.