# 177230 Seismic Transmitter

## Datasheet

Bently Nevada Machinery Condition Monitoring

177232 Rev. T

## Description

The 177230 Seismic Transmitter is a simple, loop-powered device that can be quickly and easily installed. It can be integrated into your programmable logic controller (PLC) or controls system linked to a plant asset condition monitoring solution. Its simple design reduces training, maintenance, and service costs. The transducer helps you better manage downtime, optimize maintenance planning, and avoid unforeseen catastrophic failures of machinery assets.

The 177230 Seismic Transmitter incorporates robust CM design for reliability and implements an industry-standard 4 to 20 mA loop-powered transmitter.

### Easily Installed and Integrated

- Interfaces with PLCs and control systems (including DCS and SCADA).
- Requires only a short learning curve for operations and maintenance, through a familiar interface similar to that for connecting other PLC or control system inputs.
- Requires no field configuration or adjustments.
- Needs few additional parts for a complete system.
- Includes technical support for customers on how to monitor their equipment.
- Includes self-test.
- Incorporates protected interface.
- Supports a variety of interface cables.

### Data Quality

- Provides accurate and repeatable data.
- Uses simple data format.
- Provides raw vibration signal for verification and analysis.

Bently Nevada
a Baker Hughes business

## EHS Compliant

- Implements safe and ergonomic design.
- Supports access to hazardous areas.

# Specifications

## Electrical

| | |
|---|---|
| Excitation Voltage | 12 to 30 Vdc<br>(Current limited to 40 mA) |

This product is for use with PLCs, DCS, and SCADA systems that have internal power supplies which are typically current limited in the range of 30 mA to 35 mA.

| | |
|---|---|
| Settling Time | Less than 15 seconds within 2% of final value |
| Mounted Resonant Frequency | Greater than 12 kHz |
| Transverse Sensitivity | Less than 5% of sensitivity |
| Sensing Element Type | Ceramic / Shear |
| **Connector Wiring Convention** | |
| Pin A | 4-20 mA Positive Loop<br>(Positive with reference to Pin B) |
| Pin B | 4-20 mA Loop Return<br>(Negative Loop Return for Pin A and common for Dynamic Signal) |
| Pin C | Dynamic Acceleration Signal<br>(Unbuffered, referenced to Pin B) |

The Dynamic Signal Negative (Pin B) requires isolation from any grounding. If this terminal is grounded, the 4-20 mA loop will short, resulting in no output.

| **Velocity Output** | |
|---|---|
| Output Signal | 4 to 20 mA Current Loop from Pin A to Pin B |
| Full Scale Range (-AA) | **00** - 12.7 mm/s (0.5 in/s) ± 10%<br>**01** - 25.4 mm/s (1.0 in/s) ± 10%<br>**02** - 50.8 mm/s (2.0 in/s) ± 10%<br><br>Full Scale, broadband RMS (Root Mean Square) |
| Sensitivity – Main Loop | 4 ± 0.3 mA equals 0.0 mm/s<br>20 ± 2 mA equals Full Scale Range |
| Frequency Response (-BB) | **01** - 10 Hz to 1 kHz ± 10%<br>(600 cpm to 60 kcpm ± 10%)<br>Output signal is proportional to the RMS vibration levels.<br><br>**02** - 3 Hz to 1 kHz ± 10%<br>(180 cpm to 60 kcpm ± 10%)<br>Output signal is proportional to the peak vibration levels. |
| **Acceleration Output** | |
| Output Signal | Unbuffered Voltage from Pin C to Pin B (Reference) |
| Sensitivity | 10.2 mV/m/s$^2$ (100 mV/g) ± 20% |
| Full Scale Range | 147 m/s$^2$ ( 15 g) peak |
| Frequency Response | 2.5 Hz to 10 kHz ± 10%<br>(150 cpm to 600 kcpm ± 10%) |
| Linearity | ± 1% of Full Scale |
| Output Bias | 2.5 V ± 0.1 V (Referenced to Pin B) |

## Environmental Limits

| | |
|---|---|
| Operating Temperature | -40°C to +85°C<br>(-40°F to +185°F) |
| Electrical Isolation | Greater than $10^8$ ohms |
| Isolation Breakdown Voltage | 600 $V_{rms}$ with less than 1 mA leakage current |
| Shock Survivability | 9.810 m/s$^2$ (1.000 g peak), maximum drop test |

This part typically mounts directly to the machine via a stud. Customers can use this device with a magnetic base, but must take care not to "snap" the unit onto the machine. This snapping action can create a very large spike signal that can damage the electronics. Rolling the magnetic-base onto the machine greatly reduces the spike signal so that the unit should not have any issues.

| | |
|---|---|
| Sensor Seal | Hermetically sealed |
| Relative Humidity of Transmitter | To 100% non-submerged |
| Magnetic Field Sensitivity | Less than 20 µm/s/gauss (790 µin/s/gauss) peak<br>Less than 14.7 mm/s$^2$/gauss (150 µg/gauss) peak<br>[based on 50 gauss, 50 - 60 Hz] |

## Physical

| | |
|---|---|
| Weight | 131 g (4.62 oz), typical |
| Diameter | 25.4 mm (1.00 in) |
| Height | 66.0 mm (2.60 in) |
| Case Material | 316L stainless steel |
| Connector | 3-pin MIL-C-5015, 316L stainless steel |
| Mounting Hole | ¼-28 UNF |
| Mounting Threads | M6 X 1 SI<br>M8 x 1.25 SI<br>¼-28 UNF |

These stud adapters are provided with each device. For additional adapters, see Ordering Information on page 7. Or contact Benty Nevada Tech Support.

| | |
|---|---|
| Mounting Torque | 4 to 7 N-m (35.4 to 62.0 in-lbf) |

# Compliance and Certifications

## FCC

This device complies with part 15 of the FCC Rules. Operation is subject to the following two conditions:

- This device may not cause harmful interference.
- This device must accept any interference received, including interference that may cause undesired operation.

## EMC

EMC Directive 2014/30/EU

## RoHS

RoHS Directive 2011/65/EU

## Maritime

DNV rules for classification – Ships

DNV rules for classification – High speed and light craft

DNV offshore standards



Bently Nevada
a Baker Hughes business

# Hazardous Area Approvals

For the detailed listing of country and product-specific approvals, refer to the *Approvals Quick Reference Guide (108M1756)*.

For additional technical documentation, please log in to bntechsupport.com and access the Bently Nevada Media Library.

## cNRTLus

Ex nL IIC T4:
AEx nA IIC T4:
Class I, Div 2, Groups A, B, C, D.

Ex ia IIC T4:
AEx ia IIC T4:
Class I, Div 1, Groups A, B, C, D;
Class II, Div 1, Groups E, F, G;
Class III, Div 1

Install per drawing 177234

T4 @ Ta ≤ 80°C

## ATEX/IECEx

| | |
|---|---|
| **177230** | II 1 G<br>Ex ia IIC T4 Ga<br><br>II 3 G<br>Ex na IIC T4 Gc<br>T4@ Ta = -40°C to 80°C |
| **Entity Parameters** | |

| **Zone 0/1** | **Zone 2** |
|---|---|
| Ui= 28 V | Ui= 28 V |
| Ii= 120 mA | Ii= 120 mA |
| Pi= 1 W | Pi= 1 W |
| Ci=0 | |
| Li=121.06 µh | |

# Hazardous Area Conditions of Safe Use

## ATEX/IECEx

**Zone 0/1:**

Equipment must be connected to equipment, which meets the above listed entity parameters.

The cables type A or B (in compliance with EN 60079-25) must respect the cable parameters listed with the entity parameters.

**Zone 2:**

The supply electrical parameters shall not exceed the values mentioned in the tables above.

# Ordering Information

For the detailed listing of country and product-specific approvals, refer to the *Approvals Quick Reference Guide (108M1756)*.

For additional technical documentation, please log in to bntechsupport.com and access the Bently Nevada Media Library.

## Seismic Transmitter

### 177230-AA-BB-CC

| **A: Measurement Range** | |
|---|---|
| **00** | 0 – 12.7 mm/s (0 – 0.5 in/s) |
| **01** | 0 – 25.4 mm/s (0 – 1.0 in/s) |
| **02** | 0 – 50.8 mm/s (0 – 2.0 in/s) |
| **B: Frequency** | |
| **01** | 10 Hz to 1 kHz (600 to 60 kcps) RMS (Root Mean Square) |
| **02** | 3 Hz to 1 kHz (180 to 60 kcps) peak |
| **C: Approvals** | |
| **05** | Multiple Approvals (CSA/NRTL/C, ATEX/IECEx) |

Only standard or common AA-BB-CC configurations are available.

## Interconnect Cable without Armor

### 16925-AA

| **A: Length in feet** |
|---|
| Order in increments of 1 foot (0.3 m) |
| Minimum length: 3 feet (0.91 m)<br>Maximum length: 99 feet (30.2 m)<br>Example: **25** = 25 feet |

These standard lengths are available. You can order custom lengths at additional cost.

| Feet | Meters (approx.) |
|---|---|
| **10** | 3.1 |
| **12** | 3.6 |
| **15** | 4.5 |
| **17** | 5.0 |
| **20** | 6.0 |
| **25** | 7.6 |
| **30** | 9.0 |
| **99** | 30.0 |

## Interconnect Cable with Armor

### 16710-AA

| **A: Length in feet** |
|---|
| Order in increments of 1 foot (0.3 m) |
| Minimum length: 3 feet (0.91 m)<br>Maximum length: 99 feet (30. 2m)<br>Example: **25** = 25 feet |

These standard lengths are available. You can order custom lengths at additional cost.

| Feet | Meters (approx.) |
|---|---|
| **08** | 2.4 |
| **10** | 3.1 |
| **12** | 3.6 |
| **15** | 4.5 |
| **17** | 5.0 |
| **20** | 6.0 |
| **30** | 9.0 |
| **99** | 30.0 |

# Ordering Accessories

You can order these accessories from the vendors named. Contact the vendor with the part number and ask for their part that fits your application.

## 3-Pin Connector (MIL-C-5015)

| | |
|---|---|
| Base | Cannon (ITT industries)<br>ittcannon.com<br>P/N: CA3106R-10SL-3S F97 or<br>P/N: MS3106R-10SL-3S |
| Shell | Sunbank Co.<br>sunbankcorp.com |
| | Glenair, Inc.<br>glenair.com |
| Wire (3-wire with shield) | Three-conductor 18 to 22 AWG cables with a 0.01" minimum outer jacket and inner wire insulation, and 80% minimum coverage shield. Insulation rating should be 600 V minimum. |
| Mil-W-16878/4 (Type E) | Sonic/Thermax<br>thermaxcdt.com<br>18 AWG - P/N: 18-TE-1930 (3) SXE<br>22 AWG - P/N: 22-TE-1934 (3) SXE |
| | Standard Wire and Cable Co.<br>std-wire.com<br>18 AWG - P/N: 1100-88T<br>22 AWG - P/N: 1100-66T |
| | Belden<br>belden.com<br>18 AWG - P/N: 83336<br>22 AWG -P/N: 83334 |

## Studs and Adapters

| Part No. | Description |
|---|---|
| 89139-01 | M-M ¼-28 UNF to ⅜-24 UNF standard stud |
| 128038-01 | M-M ¼-28 UNF to ⅜-24 hex plate stud (1-⅜" X 0.25") |
| 146396-01 | F-M ¼-18 NPT to ¼-28 adapter |
| 146394-01 | F-M ¼-28 UNF to ¼-18 NPT adapter |
| 37439-01 | F-M ¼-28 UNF to ¼-28 UNF mounting base |
| 164373 | M-M ¼-28 UNF to ¼-28 UNF standard stud with brass tip |
| 135826-01 | M-M ¼-28 UNF to M10 X 1.0 standard stud |

# Graphs and Figures

Dimensions shown in mm (inches) except as noted.

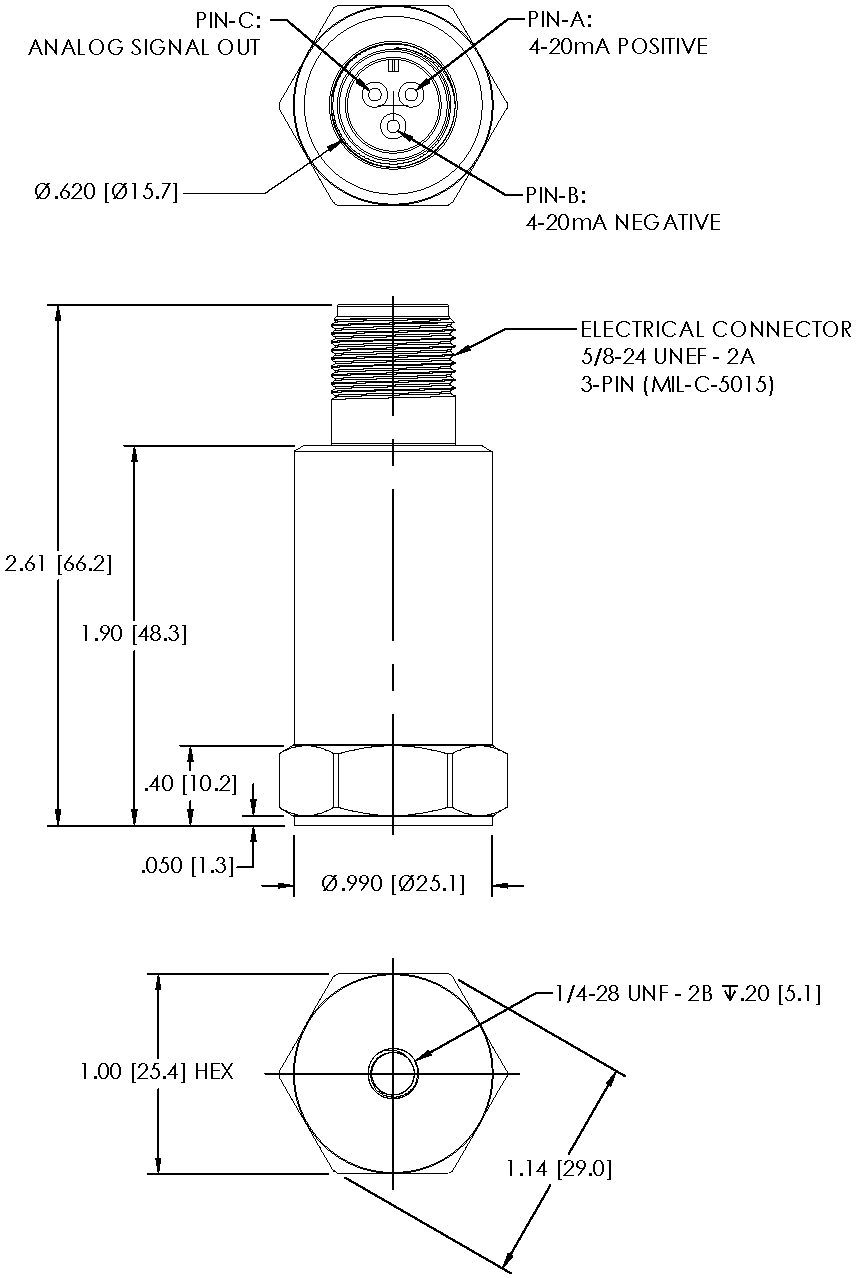


**Figure 1: Transducer Mechanical Outline and Dimensions**

Copyright 2024 Baker Hughes Company. All rights reserved.

Bently Nevada and Orbit Logo are registered trademarks of Bently Nevada, a Baker Hughes business, in the United States and other countries. The Baker Hughes logo is a trademark of Baker Hughes Company. All other product and company names are trademarks of their respective holders. Use of the trademarks does not imply any affiliation with or endorsement by the respective holders.

Baker Hughes provides this information on an "as is" basis for general information purposes. Baker Hughes does not make any representation as to the accuracy or completeness of the information and makes no warranties of any kind, specific, implied or oral, to the fullest extent permissible by law, including those of merchantability and fitness for a particular purpose or use. Baker Hughes hereby disclaims any and all liability for any direct, indirect, consequential or special damages, claims for lost profits, or third party claims arising from the use of the information, whether a claim is asserted in contract, tort, or otherwise. Baker Hughes reserves the right to make changes in specifications and features shown herein, or discontinue the product described at any time without notice or obligation. Contact your Baker Hughes representative for the most current information.

The information contained in this document is the property of Baker Hughes and its affiliates; and is subject to change without prior notice. It is being supplied as a service to our customers and may not be altered or its content repackaged without the express written consent of Baker Hughes. This product or associated products may be covered by one or more patents. See Bently.com/legal.

1631 Bently Parkway South, Minden, Nevada USA 89423
Phone: 1.775.782.3611 (US) or Bently.com/support
Bently.com