3300 XL NSv Proximity Transducer System

Datasheet

Cordant™

147385 Rev. R

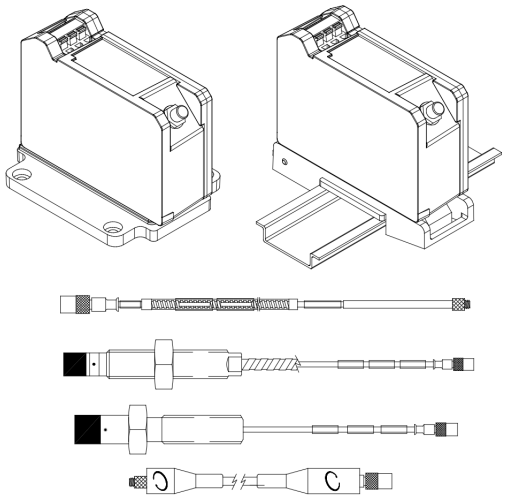

Description

The 3300 XL NSv Proximity Transducer system is intended for use with centrifugal air compressors, refrigeration compressors, process gas compressors, and other machines with tight installation requirements. The 3300 XL NSv Proximity Transducer System consists of:

- a 3300 NSv probe
- a 3300 NSv extension cable
- a 3300 XL NSv Proximitor Sensor(1)

The primary uses for the 3300 XL NSv Transducer System are for areas where counter bore, sideview, or rearview restrictions limit the use of standard Bently Nevada 3300 and 3300 XL 5 and 8 mm Transducer Systems. It is also ideal for small target applications, such as measuring radial vibration on shafts smaller than 51 mm (2 in) or axial position on flat targets smaller than 15 mm (0.6 in). It is primarily used in the following applications on fluid-filmed bearing machines where a small shaft or reduced side-view is present:

- Radial vibration and radial position measurements
- Axial (thrust) position measurements
- Tachometer and zero speed measurements
- Phase reference (Keyphasor signals)

The 3300 XL NSv Transducer System design allows it to replace both the 3300 RAM Transducer Systems and the 3000-series or 7000-series 190 Transducer System. Upgrades from the 3300 RAM system to the 3300 XL NSv system may use the existing probe, extension cable, and monitoring

Baker Hughes

system with 3300 XL NSv Proximitor Sensor. Upgrades from the 3000-series or 7000-series Transducer System must replace the probe, extension cable, and Proximitor Sensor with NSv components.

The 3300 XL NSv Transducer System has an Average Scale Factor of 7.87 V/mm (200 mV/mil), which is the most common output for eddy current transducers. Its enhanced side-view and small target characteristics give it a shorter linear range than the Bently Nevada 3300 XL-series 5 and 8 mm Transducer System. The 1.5 mm (60 mils) of linear range exceeds the linear range of the 3000-series 190 Transducer System.

> Although the terminals and connector on the Proximitor Sensor have protection against electrostatic discharge, take reasonable precautions to avoid electrostatic discharge during handling.

Proximitor Sensor

The 3300 XL NSv Proximitor Sensor has similar features to those found in the 3300 XL 8 mm Proximitor Sensor. Its thin design allows the user to mount it in either a high-density DIN-rail installation or a more traditional panel mount configuration. Improved RFI/EMI immunity allows the 3300 XL NSv Proximitor Sensor to achieve European CE mark approvals without any special mounting considerations. This RFI immunity also prevents nearby high frequency radio signals from adversely affecting the transducer system. SpringLoc terminal strips on the Proximitor Sensor require no special installation tools and facilitate faster, highly robust field wiring connections.

Proximity Probe and Extension Cable

The 3300 NSv probe and extension cable are mechanically and electrically compatible and interchangeable with Bently Nevada's previous 3300 RAM proximity probe and extension cable. The NSv probe has increased chemical resistance compared to the 3300 RAM probe, which allows its use in many process compressor applications. The side-view characteristics of the 3300 NSv probe are also superior to those of the 3000-series 190 probe when gapping the 3300 NSv probe at the same distance from the probe target.

The 3300 NSv probe comes in varying probe case configurations, including armored and unarmored 1/4-28, 3/8-24, M8X1 and M10X1 probe threads. The reverse mount 3300 NSv probe comes standard with either 3/8-24 or M10X1 threads. All components of the transducer system have gold-plated brass ClickLoc connectors. ClickLoc connectors lock into place and prevent the connection from loosening. The patented TipLoc molding method provides a robust bond between the probe tip and the probe body. Bently Nevada's patented CableLoc design provides 220 N (50 lb) of pull strength and securely attaches the probe cable to the probe tip. Connector protectors are recommended for use on the probe-to-extension cable connection, as well as on the cable-to-Proximitor Sensor connection. Connector protectors prevent most liquids from entering into the ClickLoc connectors and adversely affecting the electrical signal(2).

Notes:

(1) Proximitor Sensors are supplied by default from the factory calibrated to AISI 4140 steel. Calibration to other target materials is available upon request.

(2) Silicone tape is also provided with each 3300 NSv extension cable and can be used instead of connector protectors. Silicone tape is not recommended in applications where the probe-to-extension cable connection will be exposed to turbine oil.

Specifications

Unless otherwise noted, the following specifications are for a 3300 XL NSv Proximitor Sensor, extension cable and probe between 0°C and +45°C (+32°F to +113°F) at a maximum altitude of 2000 m, with a -24 Vdc power supply, a 10 kΩ load, a Bently Nevada supplied AISI 4140 steel target that is 31 mm (1.2 in) diameter or larger, and a probe gap of 1.0 mm (40 mils). The system accuracy and interchangeability specifications do not apply when using a transducer system calibrated to any target other than a Bently Nevada AISI 4140 steel target.

Electrical

Proximitor Sensor Input	Accepts one non-contacting 3300 RAM or 3300 NSv Proximity Probe and Extension Cable.
Power	Requires -17.5 Vdc to -26 Vdc without barriers at 12 mA maximum consumption, -23 Vdc to -26 Vdc with barriers. Operation at a more positive voltage than -23.5 Vdc can result in reduced linear range.
Supply Sensitivity	Less than 2 mV change in output voltage per volt change in input voltage.
Output resistance	50 Ω
Probe dc Resistance	
Probe Length (m)	Resistance from the Center Conductor to the Outer Conductor (R_{PROBE}) (ohms)
0.5	4.0 ± 0.5
1.0	4.2 ± 0.5
5.0	5.3 ± 0.7
7.0	5.9 ± 0.9
Extension cable dc resistance	Center conductor: 0.220 Ω/m (0.067 Ω/ft) Shield: 0.066 Ω/m (0.020 Ω/ft)
Extension cable capacitance	69.9 pF/m (21.3 pF/ft) typical
Field Wiring	0.2 to 1.5 mm² (16 to 24 AWG)[0.25 to 0.75 mm² (18 to 23 AWG) with ferrules]. Recommend using three-conductor shielded triad cable. Maximum length of 305 meters (1,000 feet) between the 3300 XL NSv Proximitor Sensor and the monitor. See the frequency response graphs Figure 16 and Figure 17 for signal rolloff at high frequencies when using longer field wiring lengths.
Linear Range	1.5 mm (60 mils). Linear range begins at approximately 0.25 mm (10 mils) from target and is from 0.25 to 1.75 mm (10 to 70 mils) (approximately -1 to -13 Vdc).
Recommended Gap Setting	1.0 mm (40 mils)
System performance over ambient temperature range (0°C to 45°C)	
Incremental Scale Factor (ISF)	7.87 V/mm (200 mV/mil) +12.5%/−20% including interchangeability error when measured in increments of 0.25 mm (10 mils) over the 1.5 mm (60 mil) linear range.
Deviation from best fit straight line (DSL)	Less than ±0.06 mm (±2.3 mils).

Frequency Response	0 to 10 kHz: +0, -3 dB typical, with up to 305 meters (1000 feet) of field wiring.
Target Size (flat target)	Minimum: 8.9 mm (0.35 in) diameter Recommended minimum: 13 mm (0.5 in) diameter Axial position measurements on shaft diameters smaller than 13 mm (0.5 in) will generally result in a change in scale factor. Reducing the gap between the probe and target will help limit the change in scale factor. See Figure 12 for additional information.

Shaft Diameter	Minimum (standard X-Y probe configuration): 30 mm (1.2 in) Minimum (X-Y proximity probes offset axially by 23 mm [0.9 in]): 20 mm (0.8 in) Measurements on shaft diameters smaller than 30 mm (1.2 in) usually require close spacing of radial vibration or axial position transducers. This creates the potential for their electromagnetic emitted fields to interact with one another (cross-talk), resulting in erroneous readings. To prevent cross-talk, maintain minimum separation of transducer tips of at least 25 mm (1.0 in) for axial position measurements or 23 mm (0.9 in) for radial vibration measurements. See Figure 14: Probe Cross-talk with Probes Mounted in Parallel and Figure 15: Probe Cross-talk with Probes Mounted in X-Y Configuration. Radial vibration or radial position measurements on shaft diameters smaller than 20 mm (0.8 in) will generally result in greater than a 10% change in Average Scale Factor (ASF). See Figure 13 for additional information.

Ordering Information

For the detailed listing of country and product-specific approvals, refer to the *Approvals Quick Reference Guide (108M1756)*.

For additional technical documentation, please log in to bntechsupport.com and access the Bently Nevada Media Library.

3300 NSv Proximity Probes

330901 3300 NSv Probe, 1/4-28 UNF thread, without armor
330902 3300 NSv Probe, 1/4-28 UNF thread, with armor
330908 3300 NSv Probe, 3/8-24 UNF thread, without armor
330909 3300 NSv Probe, 3/8-24 UNF thread, with armor
Part Number-AA-BB-CC-DD-EE
A: Unthreaded Length Option
Unthreaded length must be at least 0.7 inch less than the case length. Order in increments of 0.1 in Length configurations: Maximum unthreaded length: 9.2 in Minimum unthreaded length: 0.0 in Example: **04** = 0.4 in
B: Overall Case Length Option
Order in increments of 0.1 in Threaded length configurations: Maximum case length: 9.9 in Minimum case length: 0.8 in Example: **2 4** = 2.4 in
C: Total Length Option
05 0.5 meter (20 in)
10 1.0 meter (39 in)
50 5.0 meters (16.4 feet)
70 7.0 meters (23.0 feet)
D: Connector and Cable-Type Option
01 Miniature coaxial ClickLoc connector with connector protector, standard cable
02 Miniature coaxial ClickLoc connector, standard cable
11 Miniature coaxial ClickLoc connector with connector protector, FluidLoc cable
12 Miniature coaxial ClickLoc connector, FluidLoc cable
E: Agency Approval Option
00 Not required
05 Multiple Approvals

3300 NSv Proximity Probes, Metric

330903 3300 NSv Probe, M8X1 thread, without armor
330904 3300 NSv Probe, M8X1 thread, with armor
330905 3300 NSv Probe, M10X1 thread, without armor

330910 3300 NSv Probe, M10X1 thread, with armor	
Part Number-AA-BB-CC-DD-EE	
A: Unthreaded Length Option	
	Unthreaded length must be at least 20 mm less than the case length. Order in increments of 10 mm. Length configuration: Maximum unthreaded length: 230 mm Minimum unthreaded length: 0 mm Example: **06** = 60 mm
B: Overall Case Length Option	
	Order in increments of 10 mm. Metric thread configurations: Maximum length: 250 mm Minimum length: 20 mm Example: **06** = 60 mm
C: Total Length Option	
05	0.5 meter (20 in)
10	1.0 meter (39 in)
50	5.0 meters (16.4 feet)
70	7.0 meters (23.0 feet)
D: Connector and Cable-Type Option	
01	Miniature coaxial ClickLoc connector with connector protector, standard cable
02	Miniature coaxial ClickLoc connector, standard cable
11	Miniature coaxial ClickLoc connector with connector protector, FluidLoc cable
12	Miniature coaxial ClickLoc connector, FluidLoc cable
E: Agency Approval Option	
00	Not required
05	Multiple Approvals

3300 NSv Reverse Mount Probe

330906-02-12-CC-DD-EE 3/8-24 UNF threads	
330907-05-30- CC-DD-EE M10X1 threads	
C: Total Length Option	
05	0.5 meter (20 in)
10	1.0 meter (39 in)
50	5.0 meters (16.4 feet)
70	7.0 meters (23.0 feet)
D: Connector Option	
02	Miniature coaxial ClickLoc connector, standard cable
12	Miniature coaxial ClickLoc connector, FluidLoc cable
E: Agency Approval Option	
00	Not required

05	Multiple Approvals For a shorter delivery time, order commonly stocked probes. Currently, stocked probes consist of the following part numbers: 330901-00-24-05-02-00, 330901-00-90-05-02-00, 330902-00-50-05-02-00, 330902-00-95-05-02-00, 330903-00-02-10-02-00, 330903-00-03-10-02-00, 330906-02-12-05-02-00.

3300 XL NSv Proximitor Sensor

330980-AA-BB	
A: Total Length and Mounting Option	
50	5.0 meters (16.4 feet) system length, panel mount
51	5.0 meters (16.4 feet) system length, DIN mount
52	5.0 meters (16.4 feet) system length, no mounting hardware[1]
70	7.0 meters (23.0 feet) system length, panel mount
71	7.0 meters (23.0 feet) system length, DIN mount
72	7.0 meters (23.0 feet) system length, no mounting hardware[1]
B: Agency Approval Option	
00	Not required
05	Multiple approvals

3300 NSv Extension Cable

330930-AAA-BB-CC	
	Make sure that the extension cable length and the probe length, when added together, equal the Proximitor Sensor total length.
A: Cable Length Option	
040	4.0 meters (13.1 feet)
045	4.5 meters (14.8 feet)
060	6.0 meters (19.7 feet)
065	6.5 meters (21.3 feet)
B: Connector and Cable Option	
00	Without stainless steel armor
01	With stainless steel armor, with FEP jacket
02	With stainless steel armor, without FEP jacket
03	Without stainless steel armor, with connector protector
04	With stainless steel armor, with FEP jacket, with connector protector
05	With stainless steel armor, without FEP jacket, with connector protector
06	FluidLoc cable without stainless steel armor
07	FluidLoc cable with stainless steel armor, with FEP jacket
08	FluidLoc cable with stainless steel armor, without FEP jacket
09	FluidLoc without stainless steel armor, with connector protector

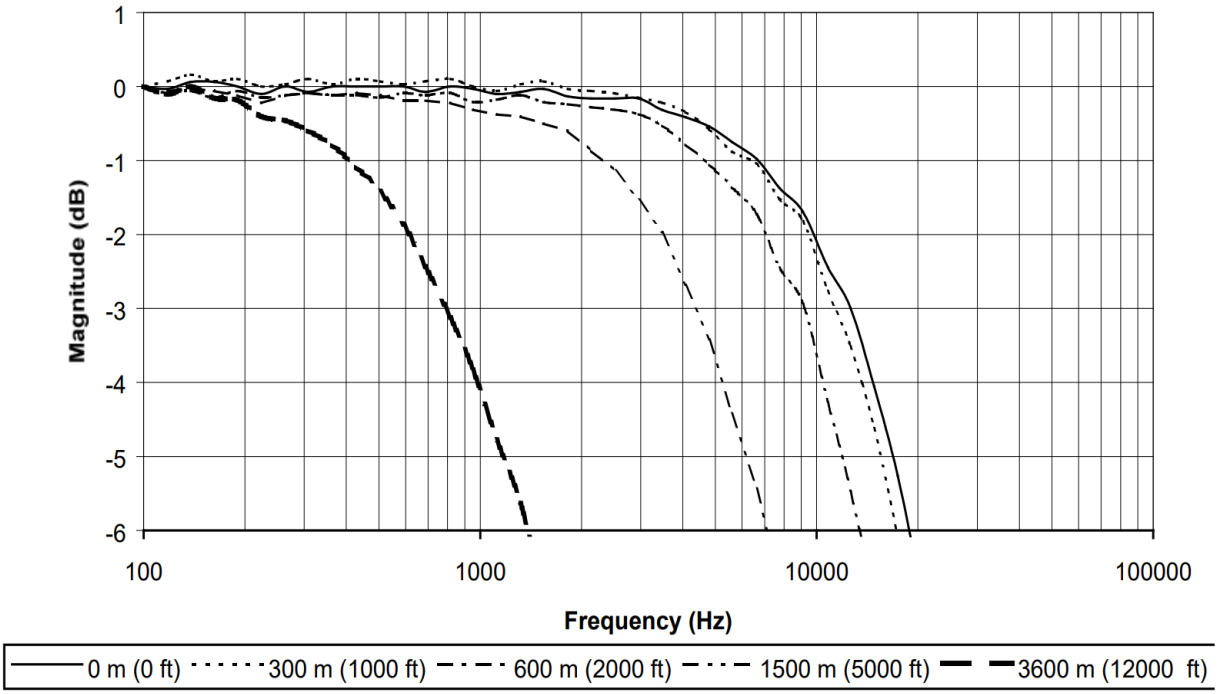

Figure 16: Frequency Response, magnitude of typical 3300 XL NSv System with various lengths of field wiring, no barriers

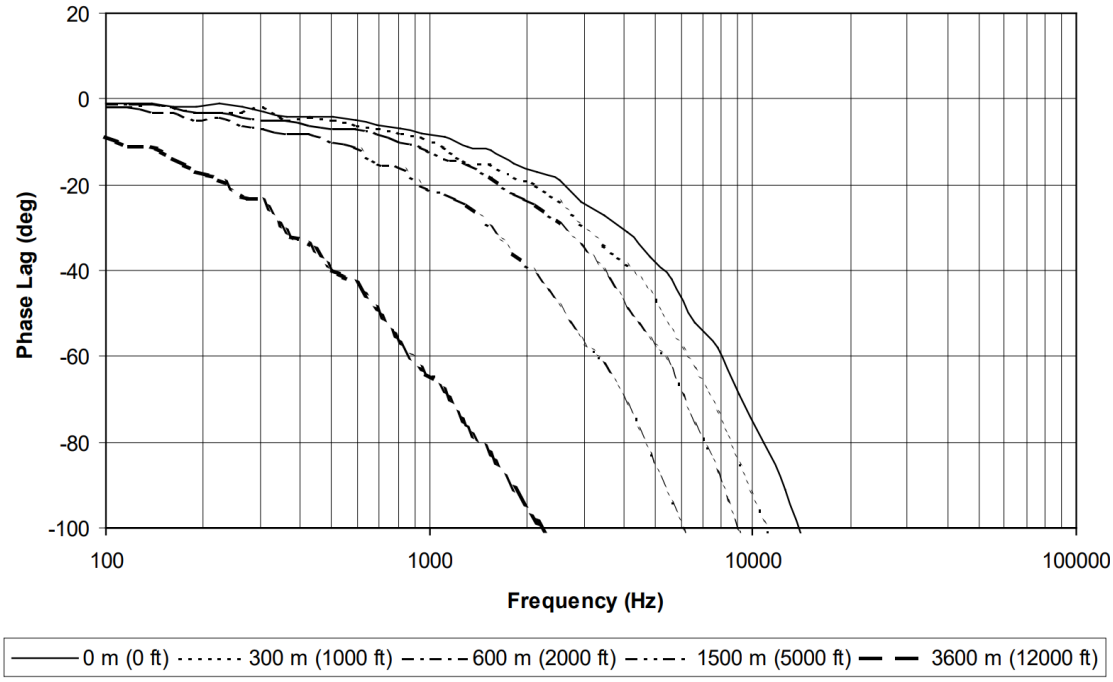

Figure 17: Frequency Response, phase change of typical 3300 XL NSv System with various lengths of field wiring, no barriers

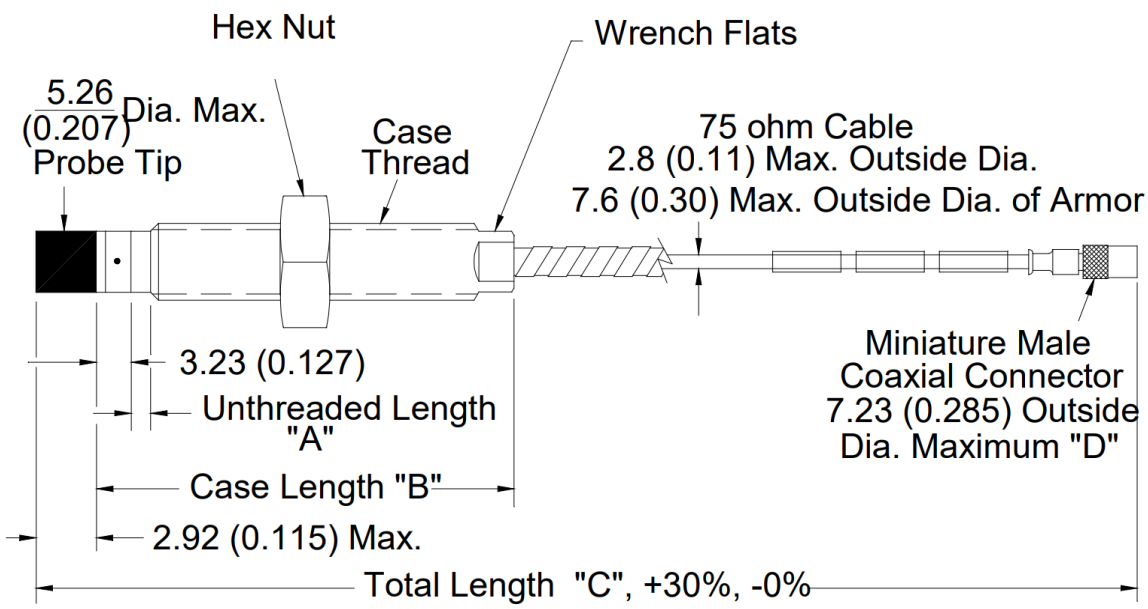

Figure 18: 3300 NSv Proximity probes, Standard Mount

330901, 1/4-28 UNF-2A, without armor

330902, 1/4-28 UNF-2A, with armor

330903, M8X1 thread, without armor

330904, M8X1 thread, with armor

330905, M10X1 thread, without armor

330908, 3/8-24 UNF-2A, without armor

330909, 3/8-24 UNF-2A, with armor

330910, M10X1 thread, with armor

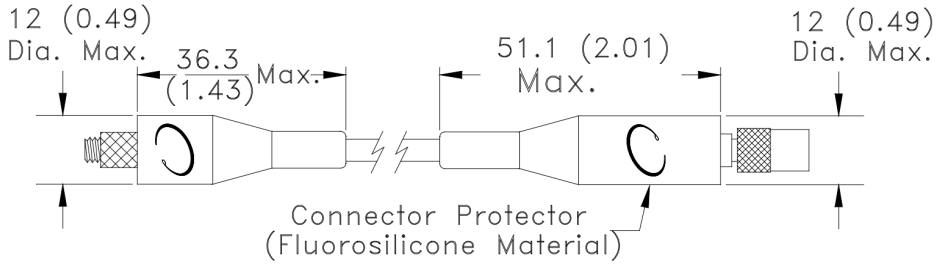

Note: Connector Protector only installed on female end when optioned. Both ends available as accessories.

Figure 19: Installed Connector Protectors

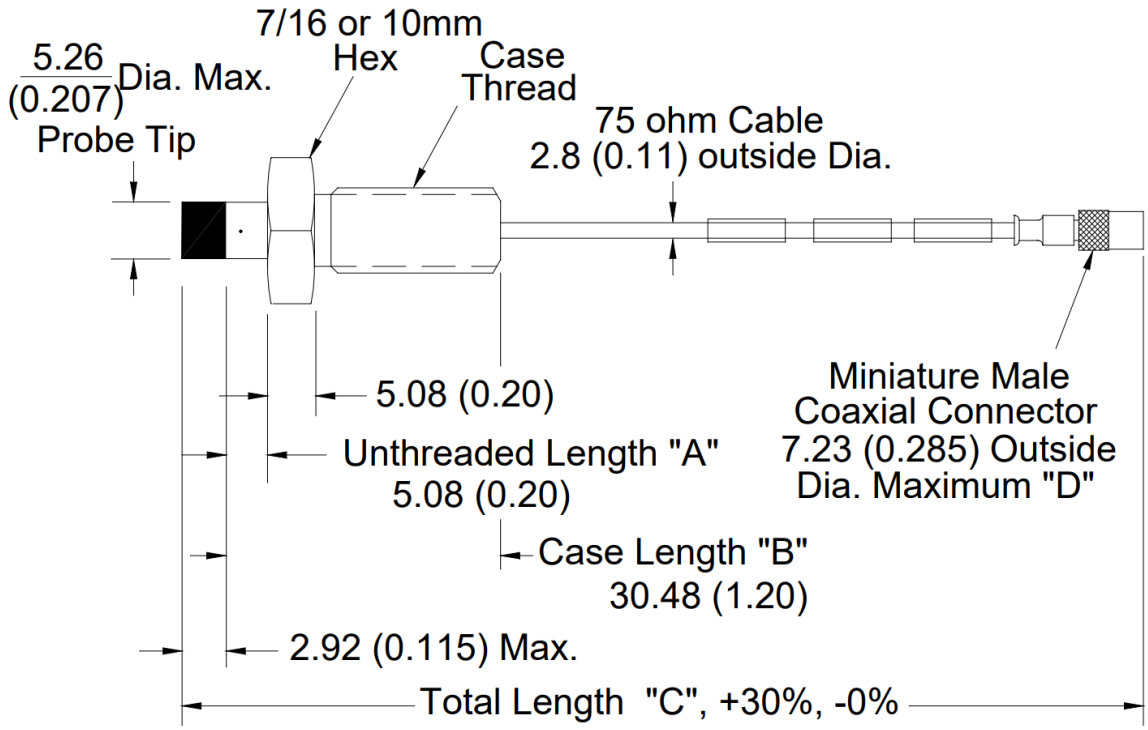

Figure 20: 3300 NSv Proximity Probes, Reverse Mount

330906, 3/8-24 UNF-2A threads

330907, M10X1 threads

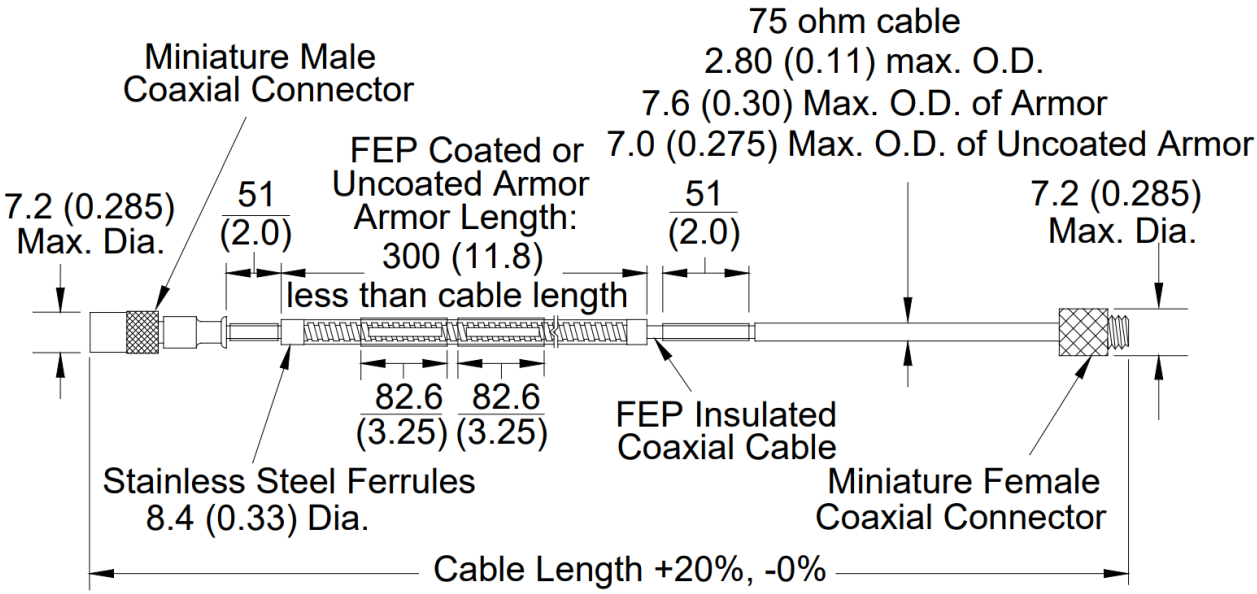

Figure 21: 330930, 3300 NSv Extension Cable