DeltaV SIS™ Logic Solver

- World's first smart SIS Logic Solver
- Flexible deployment
- Easy compliance with IEC 61511
- Scales to fit any size application
- SIL 3-rated
- Cybersecurity readiness

The DeltaV SIS™ platform is the world's first smart process safety system to use the power of predictive intelligence for increasing the availability of the entire safety instrumented function.

Introduction

The DeltaV SIS™ process safety system, part of Emerson's smart SIS, ushers in the next generation of Safety Instrumented Systems (SIS). This smart SIS approach uses the power of predictive field intelligence to increase the availability of the entire safety instrumented function.

Benefits

The World's first smart SIS. Research shows that over 85% of all faults in SIS applications occur in field instruments and final control elements. The DeltaV SIS process safety system has the first smart logic solver. It communicates with intelligent field devices using the HART protocol to diagnose faults before they cause spurious trips. This approach increases process availability and reduces lifecycle costs.

Flexible deployment. Traditionally, process safety systems have been deployed either separate from the control system or interfaced to control systems via engineered interfaces based on open protocols (e.g. Modbus). However, most end users require a higher integration for configuration, maintenance, and operations environment. DeltaV SIS can be deployed either as interfaced to any DCS or integrated with DeltaV DCS. Integration is accomplished without scarifying functional separation as safety functions are implemented in separate hardware, software, and networks while being seamlessly integrated at the workstations.

Easy Compliance with IEC 61511. IEC 61511 demands rigorous user management and the DeltaV SIS process safety system provides it. IEC 61511 requires that any changes made from an HMI (e.g. to a trip limit) be extensively vetted to ensure that the right data is written to the right Logic Solver. The DeltaV SIS process safety system automatically provides this data verification.

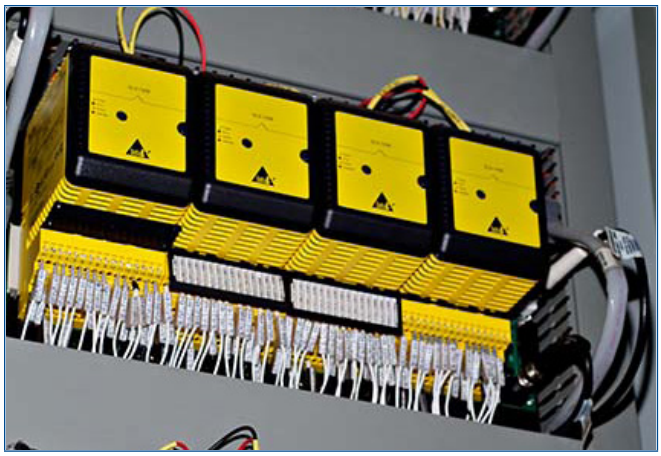

The DeltaV SIS process safety system scales to fit your safety application.

Scales to fit any size application. Whether you have an isolated wellhead or a large ESD/fire and gas application, the DeltaV SIS process safety system scales to provide you with the safety coverage you need for your SIL 1, 2 and 3 safety functions. Each SLS 1508 Logic Solver has dual CPUs and sixteen channels of I/O built into it. This means that no additional processors will ever be required to expand the system, since each Logic Solver contains its own CPUs. Scan rate and memory usage are constant and independent of system size.

SIL 3-rated. DeltaV SLS 1508 Logic Solvers are installed in redundant pairs for increased process availability of your SIS loops.

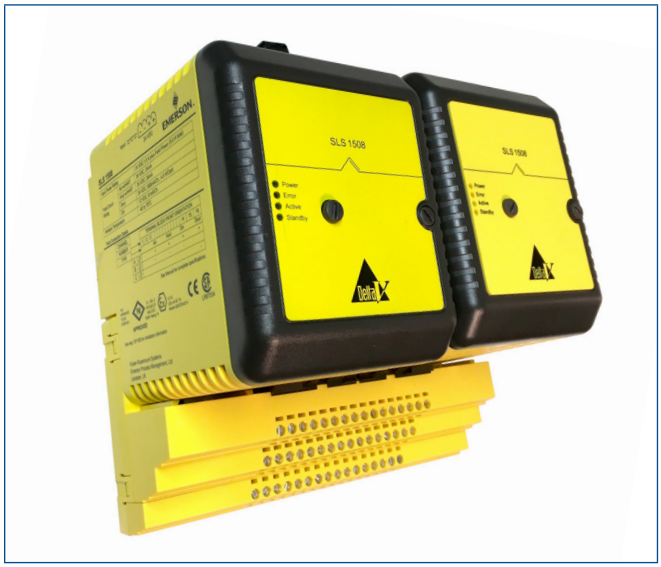

A redundant SLS 1508 Logic Solver.

Redundant architecture includes:

- Dedicated redundancy link
- Separate power supply to each Logic Solver
- I/O published locally every scan on redundant peer-to-peer link
- Same input data for each Logic Solver

Cybersecurity readiness. In an increasingly connected world, cybersecurity rapidly became an integral part of every process safety project. Building a defendable architecture is the basis for achieving a defendable safety system. DeltaV SIS when deployed with DeltaV DCS was the first process safety system to be certified according to ISA System Security Assurance (SSA) Level 1, based on IEC 62443.

Product Description

This section provides general information on DeltaV SIS hardware. Refer to the *Installing Your DeltaV Distributed Control System* manual for more information on DeltaV system hardware.

DeltaV SIS Hardware

The DeltaV SIS process safety system consists of the following hardware:

- Redundant Logic Solvers (SLS 1508) and termination blocks
- SISNet Repeaters (see separate **product data sheet**)
- Carrier extender cables
- Local peer bus extender cables
- Right 1-wide carrier with termination

Logic Solvers (SLS 1508) contain the logic-solving capability and provide an interface to 16 I/O channels that can be configured as Discrete Input, Discrete Output, Analog Input (HART) and HART two-state output channels. Logic Solvers and termination blocks install on the 8-wide carrier. Logic Solvers communicate with each other through the carriers over a two-channel, local peer bus (SISnet) and remote peer ring. Local Logic Solvers are hosted by the same DeltaV controller and remote Logic Solvers are hosted by a different DeltaV controller. Logic Solvers are powered by a 24 V DC power supply that is separate from the power supply that drives the DeltaV controller and I/O. Logic Solvers install in odd-numbered slots (1,3,5,7) on the 8-wide carrier. Redundant Logic Solvers use four slots.

SISNet Repeaters extend communication beyond the local Logic Solvers connected to one DeltaV controller and broadcast global messages to remote SLS 1508 Logic Solvers through a fiber-optic ring Carrier extender cables extend Local Bus power and signals between 8-wide carriers. Local peer bus extender cables extend the local peer bus (SISNet) between SLS 1508 Logic Solvers on different carriers. 1-wide carriers with terminators terminate the local peer bus at the final carrier. For additional information please consult DeltaV SISNet Repeater product datasheet.

Communication

Control Network: The DeltaV Control Network provides communication between the nodes in the DeltaV network. Refer to the Installing Your DeltaV Digital Automation System manual for complete information on the Control Network.

Local Bus: The Local Bus provides communication between DeltaV controllers and SLS 1508 Logic Solvers and between DeltaV controllers and SISnet Repeaters.

Local Peer Bus (SISNet): SLS 1508 Logic Solvers communicate with other SLS 1508 Logic Solvers and with local SISNet Repeaters through the carriers over a 2 channel local peer bus. The same message is broadcasted over both channels. The local peer bus must be terminated at both ends. The local peer bus is terminated at the left end through the 2-wide power/controller carrier and at the right end through a terminated 1-wide carrier.

The SISNet Repeaters can be located anywhere on a local peer bus – between the DeltaV Controller(s) and the terminated 1-wide carrier.

Remote Peer Ring: SISNet Repeaters hosted by one DeltaV controller communicate with SISNet Repeaters hosted by a different DeltaV controller over a fiber-optic remote peer ring. A local SISNet Repeater collects locally generated messages that have been designated as global variables into a single message and sends it to the next SISNet Repeater in the ring. Upon receipt of a message, the receiving SISNet Repeater broadcasts it on its local peer bus (SISNet) and forwards the message to the next SISNet Repeater in the ring. A global message is forwarded around the ring once. The primary SISNet Repeaters form one fiber-optic ring and the secondary form a separate, independent ring.

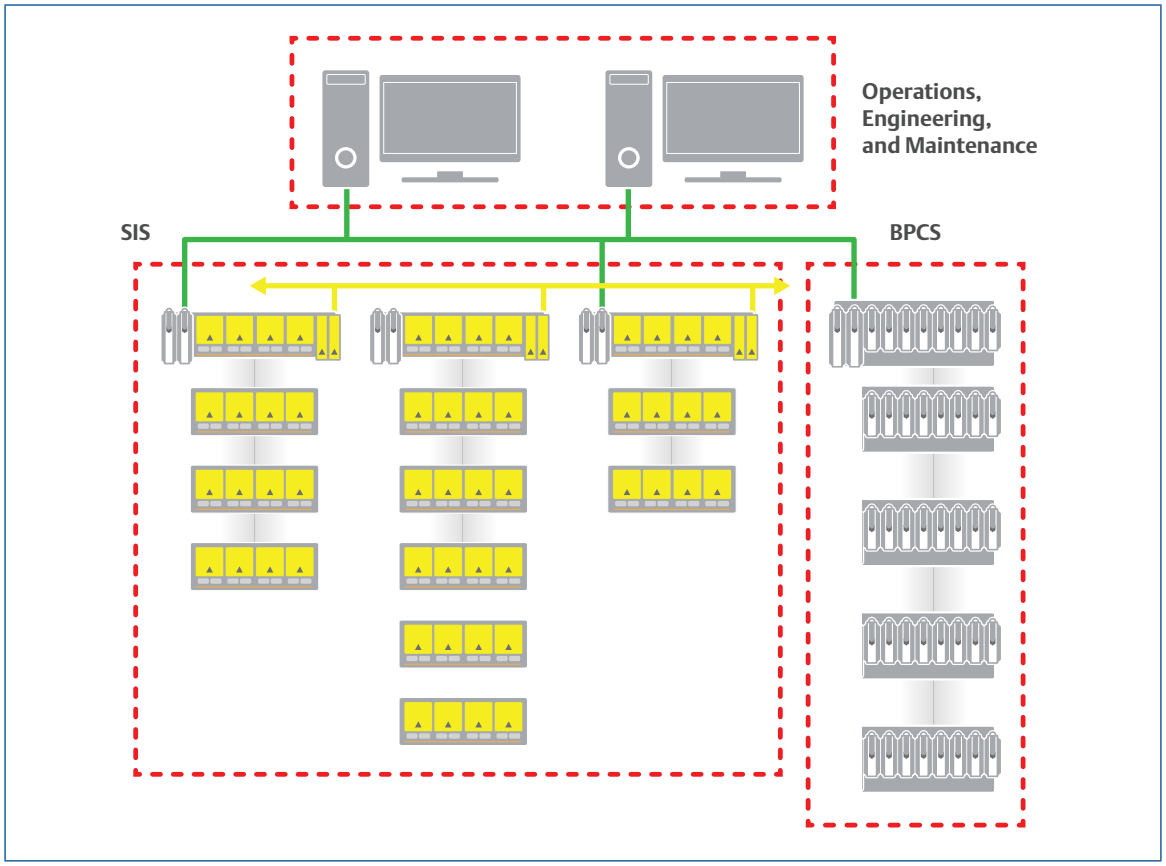

DeltaV SIS process safety system architecture.

Carrier extender cables and local peer bus extender cables connecting a DeltaV controller and 8-wide carrier with standard DeltaV I/O and SLS 1508 Logic Solver to a second 8-wide carrier (hosted by the same controller) are installed with SLS 1508 Logic Solvers, SISNet Repeaters, and a terminated 1-wide carrier. SLS 1508 Logic Solver messages are communicated to a remote SLS 1508 Logic Solver (hosted by a separate controller) through fiber-optic cables.

Multiple Domains: The simplest implementation of an SLS 1508 network is to have one SIS Network ring and one SIS Network domain, that includes all of the logic solvers in the SIS Network ring. In larger applications, the logic solvers can be split into multiple SIS Network domains. Another approach is to have multiple SIS Network rings, each on a SIS Network domain.

Unique Redundancy Methodology

Introduction to Redundancy

While the SLS 1508 Logic Solver is rated suitable for use in SIL 3 applications in simplex mode, it is installed in redundant pairs for increased process availability.

Redundant SLS 1508 Logic Solvers run in parallel at all times. Both read the inputs from the I/O terminals, both execute the logic and both drive the outputs at the I/O terminals. There is no concept of primary and backup or master and slave, which is unlike any other SIS. The only difference between the two is that one communicates with both the engineering and operator workstations and the dedicated safety network (SISNet); this is the one with the Active light on the bezel. The other (Standby) is communicating only on the SISNet.

In the event that a failure is detected in one of the SLS 1508 Logic Solvers, it automatically goes to a failed state. In this condition, all its output channels are de-energized; this has no impact on the other SLS 1508 Logic Solver or the physical outputs because the other SLS 1508 Logic Solver continues to read inputs, execute logic and drive outputs. The transition from redundant to simplex mode is therefore completely bumpless.

Redundancy

The redundant SLS 1508 Logic Solver modules are connected to the field at the redundant terminal block. No control strategy configuration is required to take advantage of SLS 1508 Logic Solver redundancy, as the system's auto-sense capability automatically recognizes the redundant pair of Logic Solvers.

An integrity error alarm in a redundant SLS 1508 Logic Solver pair will notify the operator of a failure. Both SLS 1508 Logic Solvers in a redundant pair are monitored for integrity alarms at all times.

Events that can cause integrity alarms include:

- Hardware failure within a SLS 1508 Logic Solver
- Communications failure between a SLS 1508 Logic Solver and the SISNet
- Communications failure between a redundant pair of SLS 1508 Logic Solvers
- Communications failure between a SLS 1508 Logic Solver and an DeltaV Controller
- Removal of a SLS 1508 Logic Solver from the carrier

The health and status of both SLS 1508 Logic Solvers and their channels are available in the diagnostics explorer.

When one of a redundant pair of SLS 1508 Logic Solvers is removed online there is no disturbance to the process. When the missing SLS 1508 Logic Solver is replaced with another SLS 1508 Logic Solver, the new SLS 1508 Logic Solver completes its power-up self-tests before the active Logic Solver cross-loads the current database. In safe areas, failed SLS 1508 Logic Solvers can be replaced under power. In hazardous areas, appropriate installation procedures must be followed.

Automatic proof testing can be selected on a redundant pair of SLS 1508 Logic Solvers. The desired proof-test interval is set in the configuration and the SLS 1508 Logic Solvers perform the proof test automatically. A warning is given to the operator before the automatic proof test is started.

Sequence of Events Capability

With DeltaV SIS process safety system, events are automatically generated as function blocks are executed within a module scan. Events are time stamped with a resolution of <1 ms, and they are recorded in the sequence that they occur in the Event Chronicle. When using standard function blocks such as input blocks, |voter blocks, and cause and effect blocks, a standard set of events are automatically generated without special configuration or programing required. For example, I/O failures, trip limits, first outs, and other similar events are automatically time stamped by function blocks and recorded in the Event Chronicle. When a process variable exceeds the trip limit, DeltaV SIS records the event along with the analog value and the trip condition.

In general, when there is a plant event that triggers an emergency shutdown from the SIS, one input will exceed a trip limit on one scan and this will cause outputs to trip and more inputs will then change state. Sequence of Events Recording has been used to find that first input that caused the trip by looking at all of the inputs in the plant. With the DeltaV SIS system, the operator simply filters the Event Chronicle for first out trips, and the first-out is clearly visible.

If higher resolution is required for some channels then they can be wired to both the DeltaV SIS Logic Solver and also to a DeltaV Discrete Input Card for Sequence of Events, which provides a resolution of 0.25 ms.

System Compatibility

DeltaV SLS 1508 Specifications

Common Environmental Specifications for SLS 1508 Logic Solver	
Category	**Specifications**
Storage Temperature	-40 to 85°C (-40° to 185°F)
Operating Temperature*	-40 to 70°C (-40° to 158°F)
Relative Humidity	5 to 95% , non-condensing
Airborne Contaminants	ISA-S71.04-1985 Airborne Contaminants Class G3 Conformal coating
Protection Rating	IP 20
Hazardous Area/Location	European EMC Directive per EN61326-1, Criterion A NAMUR NE21 EMC Requirements Low Voltage Directive IEC 61010-1 Factory Mutual, Non-Arcing Class 1, Div 2, Groups A, B, C, D, T4 hazardous locations ATEX 3 G EEx IIC-nA T4 EN50021:1999 CSA 1010
Shock	10 g ½-sine wave for 11 ms
Vibration	1 mm peak-to-peak from 5 to 16 Hz; 0.5 g from 16 to 150 Hz

Operating any electronics at the higher end of its temperature range for long periods of time will shorten its expected lifetime, see **Effects of Heat and Airflow Inside an Enclosure White Paper for more information.*

SLS 1508 Logic Solver Physical Specifications	
Item	**Specifications**
Input Power	24 V DC ± 20%, 1.0 A plus field power (5.0 A total)
	Note: It is recommended that the SLS and DeltaV controller and I/O use separate power supplies
Field Power	4 A maximum (actual value depends upon channel type and field device type)
Isolation	Each channel is optically isolated from the system and factory-tested to 1500 V DC. No channel-to-channel isolation.
Local Bus Current	None
Mounting	In SIS (yellow) terminal blocks in odd-numbered slots (1, 3, 5, 7) on the 8-wide carrier. Redundant SLSs take 4 slots.

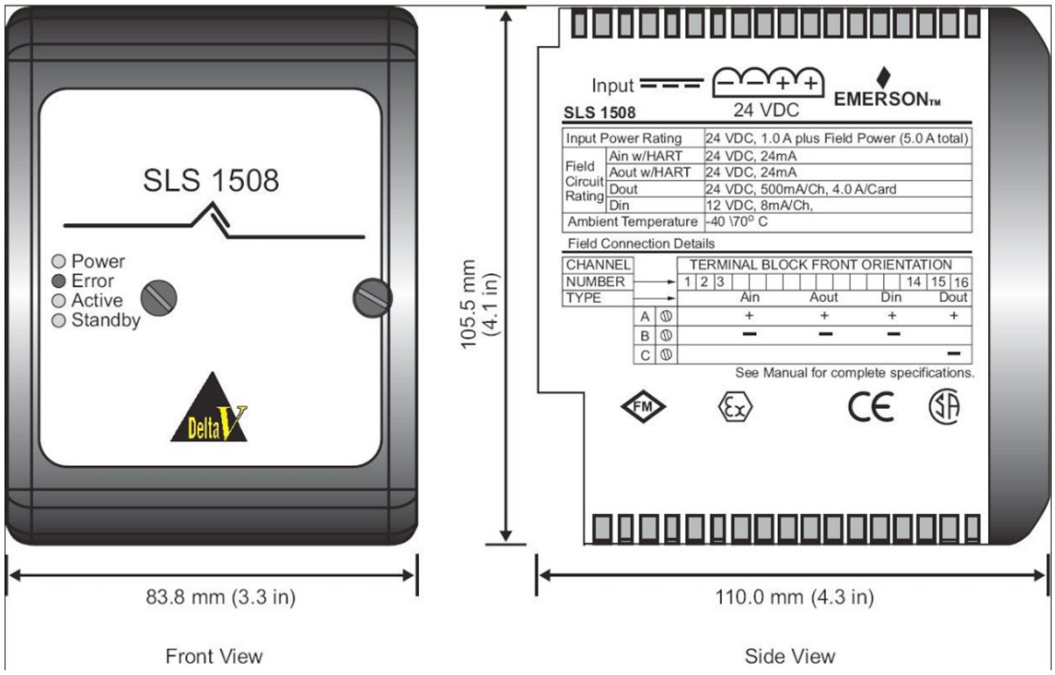

Logic Solver dimensions.

SLS 1508 Logic Solver Weight, Heat Generation and Power Consumption	
Item	**Specifications**
Redundant Logic Solver	Weight – 1.20 kg Heat Dissipation – 24 W Power – 2 A @ 24 V DC + Dig out Field Loads

Channel Specifications

The Logic Solver provides 16 channels of flexible I/O, meaning that each channel can be configured as an Analog Input (HART), HART Two-State Output, Discrete Input, or Discrete Output channel.

Analog Input Channel Specifications (Includes Hart)	
Item	**Specifications**
Number of Channels	16
Isolation	Each channel is optically isolated from the system and factory-tested to 1500 V DC. No channel-to-channel isolation.
Nominal Signal Span	4 to 20 mA
Full Signal Range	1 to 24 mA
2-Wire Transmitter Power	15.0 V minimum terminal-to-terminal @ 20 mA; current limited to 24 mA max
Input measurement accuracy	0.2% of span
Safety / Diagnostic Accuracy	2.0% of span
Resolution	16 bits
Filtering	2-pole, corner frequency 5.68 Hz -3 dB at 5.68 Hz -20.0 dB at 40 Hz (half the sample rate)

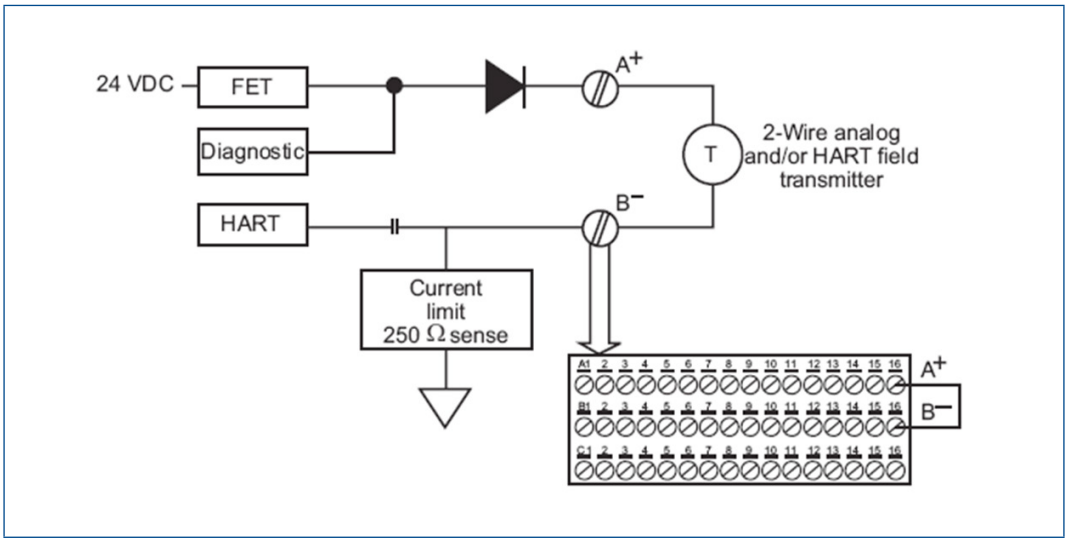

Wiring diagram and terminations for HART analog input channels.

Hart Two-State Output Channel Specifications	
Item	**Specifications**
Number of Channels	16
Isolation	Each channel is optically isolated from the system and factory-tested to 1500 V DC. No channel-to-channel isolation.
Nominal Signal Span	On state 20 mA Off state 0 or 4 mA (configurable)
Full Signal Range	0 to 24 mA
Safety / Diagnostic Accuracy	5.0% of span
Resolution	12 bits
Compliance Voltage	20 mA into 600 Ω load
Open-Loop Detection	< 1.0 mA – when the output drifts 15% out of the configured value

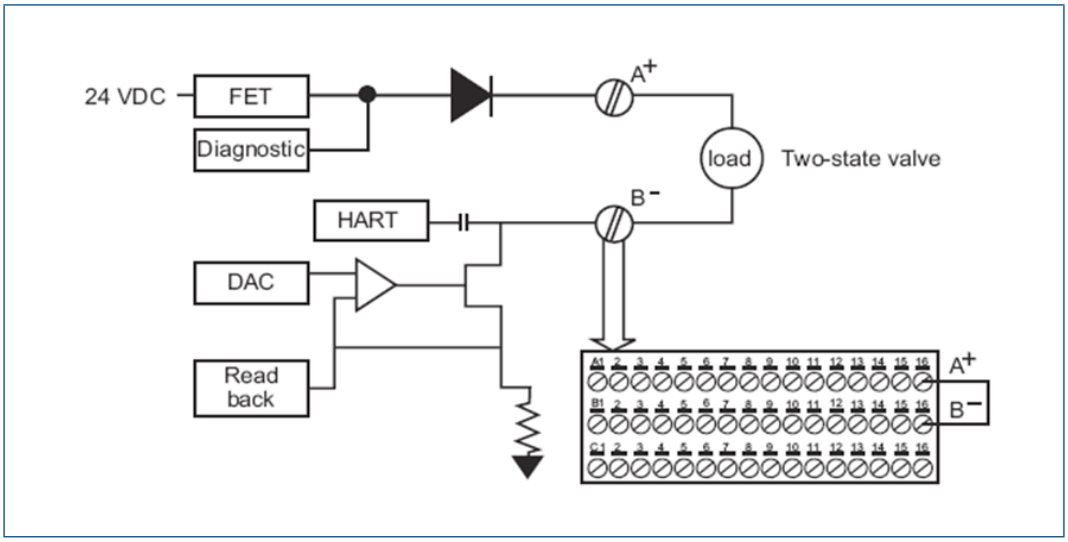

Wiring diagram and terminations for 2-Wire HART two-state output channels.

Discrete Input Channel Specifications	
Item	**Specifications**
Number of Channels	16
Isolation	Each channel is optically isolated from the system and factory-tested to 1500 V DC. No channel-to-channel isolation.
Detection Level For On	≥2 mA
Detection Level For Off	≤1.65 mA
Input Impedance	~1790 Ω
Input Compatibility	Inputs compatible with: ■ NAMUR sensors (12 V) ■ Dry contact ■ Dry contact with end-of-line resistance
Line Fault Detection – Short Circuit (Optional)	100 Ω > 6 mA
Line Fault Detection – Open Circuit (Optional)	> 40 kΩ < 0.35 mA

Line Fault Detection — The Discrete Input channels have line fault detection for detecting open or short circuits in field wiring. To use this capability you must:

Enable line fault detection in your configuration. Enable line fault detection on a channel-by-channel basis when you configure the channels.

Connect the dry contact to external resistors. Connect the dry contact to a 12 KΩ resistor in parallel (allows the open circuit detection) and a 2.4 KΩ resistor in series (allows short circuit detection).

Line Fault Detection in NAMUR Sensors — Line fault detection is built into NAMUR sensors. Do not use external resistors with NAMUR sensors; however, you must enable line fault detection in your configuration when using NAMUR sensors.

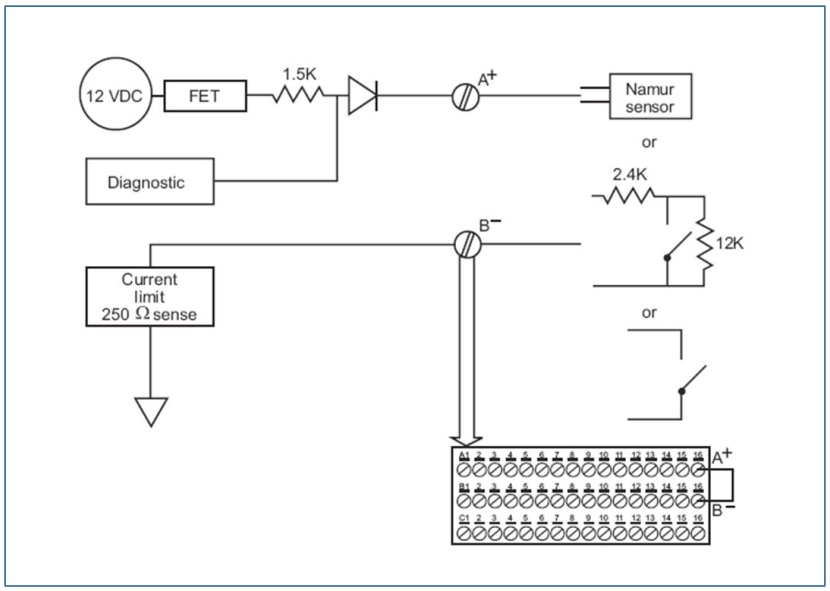

Wiring diagram and terminations for discrete input channels.

Discrete Output Channel Specifications	
Item	**Specifications**
Number of Channels	16
Isolation	Each channel is optically isolated from the system and factory-tested to 1500 V DC. No channel-to-channel isolation.
Output Voltage	Field power minus 2 V
Field Power	0.5 A continuous per channel; 4.0 A max. per card
Output Loading	56 to 3500 Ω
Off-State Leakage	Open loop test on: 7.8 mA Open loop test off: 4.5 µA typical; 10 µA max. Note: Optional pulse test will apply 24 V DC pulse on line for 1.0 mS every 50 mS. Refer to the Installation Notes for more information on pulse testing.
Short Circuit Protection	Outputs current limited to 2.0 A typical
Line Fault Detection – Short Circuit	<5 Ω for >1 second with +24 V DC field power. Refer to the Installation Notes for information on pulse testing.
Line Fault Detection – Open Circuit (With +24 V Dc Field Power)	>25 kΩ for open loop detection <3.5 kΩ for no open loop detection Refer to the Installation Notes for information on pulse testing.

Pulse testing is recommended; however, it can be disabled for field devices such as solid state relays that cannot support it.

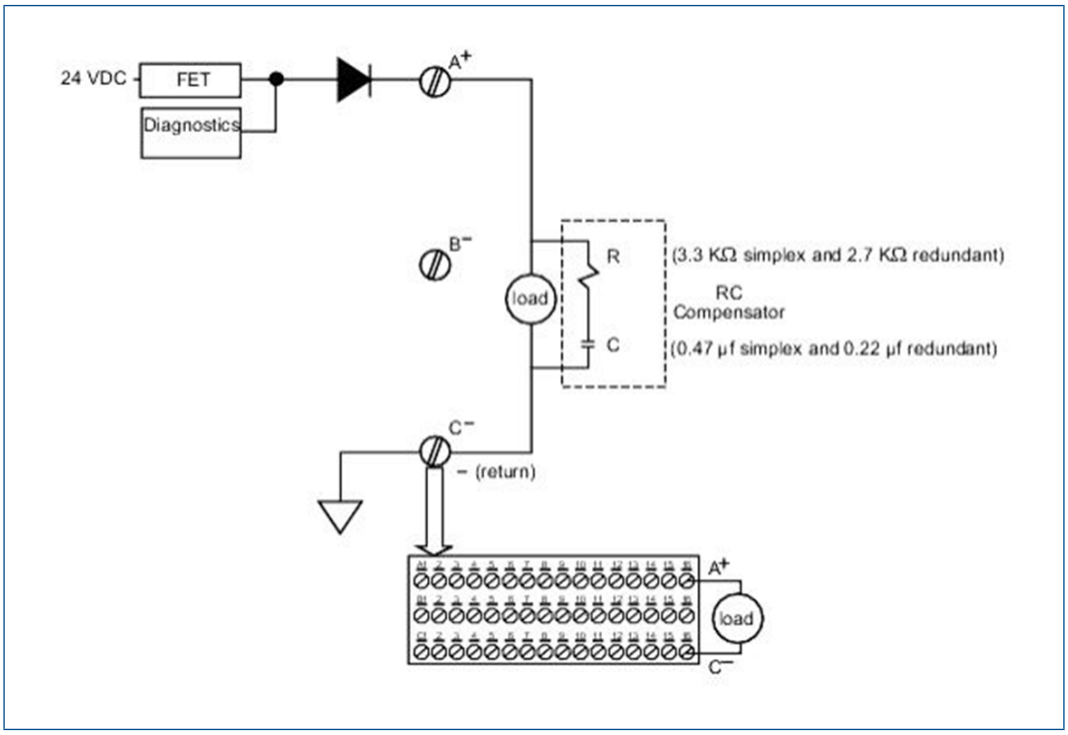

Wiring diagram and terminations for discrete output channels.

Ordering Information

Description	Model Number
DeltaV SLS 1508 Redundant Logic Solver – includes Terminal Block	VS3202
1-wide SIS Net Terminator Assembly (right-hand extender card and two termination resistors)	VS6051
Database Extension for SIS	VS1508
8-Wide Carrier with Extend Cable Assembly (Cable Assembly consists of left & right extender cards, 2 coax cables for Logic Solver communications bus and one cable for carrier backplane communications)	VE4050E1C2
2-Wide Carrier (New modified 2-wide carrier containing bus terminations)	VE3051C0

Related Products

- **DeltaV Workstations and Server Hardware**
- **DeltaV M-Series Traditional I/O**
- **DeltaV SIS Hardware Carriers**
- **DeltaV M-Series I/O Subsystem Horizontal Carriers**
- **DeltaV VerticalPlus I/O Subsystem Carrier**
- **DeltaV PK Controller**
- **DeltaV SIS with Electronic Marshalling**

Prerequisites

- DeltaV v8.3 software or later.
- The 2-wide power/controller carriers were upgraded in 2004 to accommodate the DeltaV SIS system. The new version of the 2-wide power/controller carrier has a small white rectangle printed on the board. This is visible between the power supply module and the MD Controller. The new part number is KJ4001X1-BA3 or higher. The old version had a white dot in place of the rectangle. The old version (with white dot) will not support downloads to a Logic Solver.
- The earliest MD Controllers will not support the DeltaV SIS system. The MD controllers must have a part number 12P2093X082 or higher.

©2021, Emerson. All rights reserved.

The Emerson logo is a trademark and service mark of Emerson Electric Co. The DeltaV logo is a mark of one of the Emerson family of companies. All other marks are the property of their respective owners.

The contents of this publication are presented for informational purposes only, and while diligent efforts were made to ensure their accuracy, they are not to be construed as warranties or guarantees, express or implied, regarding the products or services described herein or their use or applicability. All sales are governed by our terms and conditions, which are available on request. We reserve the right to modify or improve the designs or specifications of our products at any time without notice.

DELTAV™

EMERSON™