Foxboro Evo™ Process Automation System

Product Specifications

Foxboro by Schneider Electric

PSS 31H-2Z37

FBM237, 0 to 20 mA Output Module (Redundant Ready)

The FBM237 contains eight 0-20 mA analog output channels. In situations where control system reliability is important, the FBM237 may have a redundant module installed. This permits all eight outputs to maintain operation in the presence of a single fault and during the time that the suspect module is removed and replaced. The 0-20 mA signals are electrically compatible with HART® field devices.

OVERVIEW

The FBM237, 0 to 20 mA Output Module contains eight channels.The outputs are galvanically isolated from other channels and ground. The module can be used as a single unit, or as a redundant pair (two FBM237s).

When used as a redundant pair, field output signals are wired to one common termination assembly (see Figure 1). Each module in the pair independently holds the output(s) at its specified output value(s).

FEATURES

The key features of the FBM237 are:

- Eight 20 mA dc analog output channels
- Each output channel is galvanically isolated
- Single or redundant modules
- Compact, rugged design suitable for enclosure in Class G3 (harsh) environments
- Termination Assemblies (TAs) for locally or remotely connecting field wiring to the FBM237

- TA for use with Output Bypass Station to maintain outputs during maintenance operations
- 3-tier termination assembly for per channel internally and/or externally loop powered transmitters.

REDUNDANT ANALOG OUTPUTS

A redundant analog output function block, AOUTR, is used for each redundant pair of outputs. The AOUTR block handles output writes and initialization logic for the redundant channels. On each execution cycle identical output writes are sent to both modules, fully exercising the fieldbus and the logic circuitry of each module. When a failure is detected in one of the modules, its output is driven to 0 mA and the corresponding channel in the good module automatically continues supplying the proper current.

Each output channel drives an external load. Transmitter power from each module is diode OR'd together in the redundant adapter to assure redundant power. The microprocessor of each module executes the analog output application program, plus security routines that validate the health of the module.

Configurable options in the modules include Fail-Safe Action (Hold/Fallback), Analog Output Fail-Safe Fallback Data (on a per channel basis), Fieldbus Fail-Safe Enable, and Fieldbus Fail-Safe Delay Time. The Analog Output Fail-Safe Fallback Data option must be set for 0 mA output. This removes one of the pair of output channels from service for detectable problems such as a module not properly receiving output writes, or not passing security tests on FBM microprocessor writes to output registers. Setting of the Analog Output Fail-Safe Fallback Data option for 0 mA output also minimizes the possibility of a "fail high" result.

PHYSICAL DESIGN

FBM237 has a modular design, with a rugged extruded aluminum exterior for physical protection of the circuits. Enclosures specially designed for mounting the FBMs provide various levels of environmental protection, up to harsh environments (Class G3), per ISA Standard S71.04.

HIGH RELIABILITY

The redundancy of the module pair, coupled with the high coverage of faults, provides a very high subsystem availability time.

Either module in the redundant pair may be replaced without upsetting field output signals to the good module. The module can be removed/replaced without removing field device termination cabling, power, or communications cabling.

VISUAL INDICATORS

Light-emitting diodes (LEDs) incorporated into the front of the module provide visual status indications of fieldbus module functions.

FIELDBUS COMMUNICATION

A Fieldbus Communications Module or a Control Processor interfaces to the redundant 2 Mbps module Fieldbus used by the FBMs. The FBM237 accepts communication from either path (A or B) of the 2 Mbps Fieldbus — should one path fail or be switched at the system level, the module continues communication over the active path.

MODULAR BASEPLATE MOUNTING

The module mounts on the Standard Modular baseplate, which accommodates up to eight Fieldbus Modules. The Modular baseplate is either DIN rail mounted or rack mounted, and includes signal connectors for redundant Fieldbus, redundant independent dc power, and termination cables. Redundant modules must be located in adjacent

odd/even position pairs on the baseplate (positions 1 and 2, 3 and 4, 5 and 6, or 7 and 8). To achieve the redundant output, a redundant adapter module is placed on the two adjacent baseplate termination cable connectors to provide a single termination cable connection (see Figure 1). A single termination cable connects from the redundant adapter to the associated TA.

To system configurator applications and to other systems monitoring through SMON, System Manager, and SMDH, redundant FBM237 modules appear to be separate, nonredundant modules. The functional redundancy for these modules is provided by their associated control blocks.

TERMINATION ASSEMBLIES (TA)

Field I/O signals connect to the FBM subsystem via DIN rail mounted termination assemblies. The TAs used with the FBM237 are described in "TERMINATION ASSEMBLIES AND CABLES" on page 7.

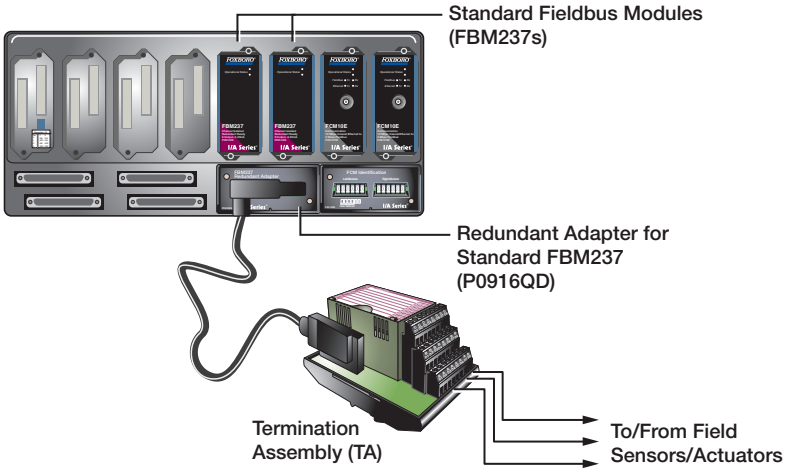

Figure 1. Redundant I/O Configuration

FUNCTIONAL SPECIFICATIONS

Output Channels
Eight 20 mA dc analog output channels. Each channel is isolated and independent.

NOTE

Redundant pairs (output) are connected by a common field I/O connector, and therefore are not isolated from each other.

Accuracy - Analog (includes linearity)
±0.05% of Span (between 0.1 mA and 20 mA)
Accuracy temperature coefficient: ±50 ppm/°C

Output Load
750 Ω maximum

Output Processing Delay
30 ms maximum

Output Range (each channel)
0 to 20.4 mA dc

Resolution
13 bits

Field Device Cabling Distance
Maximum distance of the field device from the FBM is a function of compliance voltage (18 V dc at 20.4 mA output), wire gauge, and voltage drop at the field device.

HART® Protocol Compatibility
The channels meet the impedance requirements for a HART high Impedance Device and can be used in a HART loop without interfering with the HART signals between the field device and a Hand-Held Communicator (HHC).

Loop Power Supply Protection
Each channel is channel-to-channel galvanically isolated, current limited and voltage regulated. All analog outputs are limited by their design to about 25 mA.

Isolation
Each channel is galvanically isolated from all other channels and earth (ground). The module withstands, without damage, a potential of 600 V ac applied for one minute between any channel and ground, or between a given channel and any other channel.

CAUTION

This does not imply that these channels are intended for permanent connection to voltages of these levels. Exceeding the limits for input voltages, as stated elsewhere in this specification, violates electrical safety codes and may expose users to electric shock.

Communication
Communication with its associated FCM or FCP via the module fieldbus.

Power Requirements
INPUT VOLTAGE RANGE (REDUNDANT)
24 V dc +5%, -10%

CONSUMPTION (MAXIMUM)
7 W (maximum) at 24 V dc

HEAT DISSIPATION (MAXIMUM)
5 W (maximum) at 24 V dc

Calibration Requirements
Calibration of the module and termination assembly is not required.

Regulatory Compliance
ELECTROMAGNETIC COMPATIBILITY (EMC)

European EMC Directive 89/336/EEC
Meets: EN 50081-2 Emission standard
EN 50082-2 Immunity standard
EN 61326 Annex A (Industrial Levels)

CISPR 11, Industrial Scientific and Medical (ISM) Radio-frequency Equipment - Electromagnetic Disturbance Characteristics - Limits and Methods of Measurement
Meets: Class A Limits

IEC 61000-4-2 ESD Immunity
Contact 4 kV, air 8 kV

IEC 61000-4-3 Radiated Field Immunity
10 V/m at 80 to 1000 MHz

IEC 61000-4-4 Electrical Fast Transient/Burst Immunity
2 kV on I/O, V dc power and communication lines

FUNCTIONAL SPECIFICATIONS (CONTINUED)

IEC 61000-4-5 Surge Immunity
2kV on ac and dc power lines; 1kV on I/O and communications lines

IEC 61000-4-6 Immunity to Conducted Disturbances induced by Radio-frequency Fields
10 V (rms) at 150 kHz to 80 MHz on I/O, V dc power and communication lines

IEC 61000-4-8 Power Frequency Magnetic Field Immunity
30 A/m at 50 and 60 Hz

PRODUCT SAFETY

Underwriters Laboratories (UL) for U.S. and Canada
UL/UL-C listed as suitable for use in UL/UL-C listed Class I, Groups A-D; Division 2; temperature code T4 enclosure based systems. These modules are also UL and UL-C listed as associated apparatus for supplying non-incendive communication circuits for Class I, Groups A-D hazardous locations when connected to specified Foxboro Evo™ processor modules as described in the *Standard and Compact 200 Series Subsystem User's Guide* (B0400FA). Communications circuits also meet the requirements for Class 2 as defined in Article 725 of the National Electrical Code (NFPA No.70) and Section 16 of the Canadian Electrical Code (CSA C22.1). Conditions for use are as specified in the *Standard and Compact 200 Series Subsystem User's Guide* (B0400FA).

European Low Voltage Directive 73/23/EEC and Explosive Atmospheres (ATEX) directive 94/9/EC
CENELEC (DEMKO) certified as EEx nA IIC T4 for use in CENELEC certified Zone 2 enclosure certified as associated apparatus for supplying non-incendive field circuits for Zone 2, Group IIC, potentially explosive atmospheres when connected to specified Foxboro Evo processor modules as described in the *Standard and Compact 200 Series Subsystem User's Guide* (B0400FA). Also see, "Certification for Termination Assemblies" on page 9.

NOTE

CENELEC (DEMKO) Certification does not apply to Termination Assembly P0917QZ. See Table 2 on page 8.

ENVIRONMENTAL SPECIFICATIONS(1)

Operating Conditions

TEMPERATURE

Module
-20 to +70°C (-4 to +158°F)

Termination Assembly
PVC
-20 to +50°C (-4 to +122°F)
PA
-20 to +70°C (-4 to +158°F)

RELATIVE HUMIDITY
5 to 95% (noncondensing)

ALTITUDE
-300 to +3000 m (-1000 to +10 000 ft)

Storage Conditions

TEMPERATURE
-40 to +70°C (-40 to +158°F)

RELATIVE HUMIDITY
5 to 95% (noncondensing)

ALTITUDE
-300 to +12 000 m (-1000 to +40 000 ft)

Contamination

Suitable for use in Class G3 (Harsh) environments as defined in ISA Standard S71.04, based on exposure testing according to EIA Standard 364-65, Class III.

Vibration

7.5 m/s^2 (5 to 500 Hz)

(1) The environment ranges can be extended by the type of enclosure containing the module. Refer to the Product Specification Sheet (PSS) applicable to the enclosure that is to be used.

PHYSICAL SPECIFICATIONS

Mounting

MODULE
The FBM237 mounts on a modular baseplate. The baseplate can be mounted on a DIN rail (horizontally or vertically), or horizontally on a 19-inch rack using a mounting kit. Redundant modules must be located in odd and even adjacent positions on the baseplate (positions 1 and 2, 3 and 4, 5 and 6, or 7 and 8) along with the appropriate redundancy adapter. Refer to *Standard 200 Series Baseplates* (PSS 31H-2SBASEPLT) for details. Alternatively, a non-redundant FBM237 mounts on a 100 Series conversion mounting structure. Refer to *100 Series Conversion Mounting Structures* (PSS 31H-2W8) for details.

TERMINATION ASSEMBLY
The TA mounts on a DIN rail and accommodates multiple DIN rail styles including 32 mm (1.26 in) and 35 mm 1.38 in)

Weight

MODULE
284 g (10 oz) approximate

TERMINATION ASSEMBLIES
Compression
181 g (0.40 lb, approximate)
Ring Lug
249 g (0.55 lb, approximate)

Dimensions - Module

HEIGHT
102 mm (4 in),114 mm (4.5 in) including mounting lugs

WIDTH
45 mm (1.75 in)

DEPTH
104 mm (4.11 in)

Dimensions - Termination Assemblies

Refer to page 10

Part Numbers

FBM237 MODULE
P0914XS

TERMINATION ASSEMBLIES
See “0 to 20 mA Analog Outputs - FBM237 Termination Assemblies” on page 7.

REDUNDANT ADAPTER
P0916QD

Termination Cables

CABLE LENGTHS
Up to 30 m (98 ft)

CABLE MATERIALS
Polyurethane or Low Smoke Zero Halogen (LSZH)

TERMINATION CABLE TYPE
Type 1 - Refer to Table 3

CABLE CONNECTION
25-pin male D-subminiature

Construction - Termination Assembly

MATERIAL
Polypropylene (PVC), compression
Polyamide (PA), compression
PVC, ring lug

FAMILY GROUP COLOR
Raspberry red - analog

TERMINAL BLOCKS
Outputs - 3 tiers, 8 positions
Output Bypass Jacks - 8 (P0917QZ)

Field Termination Connections

COMPRESSION - ACCEPTED WIRING SIZES
Solid/Stranded/AWG
0.2 to 4 mm^2/0.2 to 2.5 mm^2/24 to 12 AWG
Stranded with Ferrules
0.2 to 2.5 mm^2 with or without plastic collar

RING-LUG - ACCEPTED WIRING SIZES
#6 size connectors (0.375 in (9.5 mm))
0.5 to 4 mm^2/22 AWG to 12 AWG

TERMINATION ASSEMBLIES AND CABLES

Field I/O signals connect to the FBM subsystem via DIN rail mounted termination assemblies, which are electrically passive. TAs for the FBM237 module are available in the following forms:

- Compression screw type using Polyvinyl chloride (PVC) or Polyamide (PA) material
- Ring lug type using Polyvinyl chloride (PVC) material.

Each FBM237 Termination Assembly and its associated termination cable provide feedthrough connection between eight 2-wire analog output signals and the FBM237 Channel Isolated 0 to 20 mA Module.

The termination assembly can be used with a single FBM237 or with a redundant pair (two FBM237s). When used with a redundant module pair, the termination assembly is connected to the baseplate using a redundant adapter (P0916QD).

Termination Assembly (P0917QZ) includes built-in bypass jacks for each output channel. The bypass jacks accept a bypass plug from the I/A Series Output Bypass Station (Foxboro® P/N P0900HJ) or other external 20 mA sources. This option should be considered for applications where maintaining output during maintenance operations is desired.

See Table 1 for a list of TAs used with the FBM237 module.

A removable termination cable connects the DIN rail mounted TA to the FBM via a field connector on the Modular baseplate in which the FBM is installed. Termination cables are available in the following materials:

- Polyurethane
- Low Smoke Zero Halogen (LSZH).

Termination cables are available in a variety of lengths, up to 30 meters (98 feet), allowing the termination assembly to be mounted in either the enclosure or in an adjacent enclosure. See Table 3 for a list of termination cables used with the TAs for the FBM237 module.

Table 1. 0 to 20 mA Analog Outputs - FBM237 Termination Assemblies

FBM Type	Output		TA Part Number[a]		Termination	TA Cable	TA Certification
	Qty.	Signal	PVC	PA	Type[b]	Type[c]	Type[d]
FBM237	8	0 to 20 mA	P0916CC/ P0916QC	P0916YE	C RL	1	1,2
FBM237	8	0 to 20 mA	P0917QZ with bypass jacks		C	1	4,5

(a) PVC is polyvinyl chloride rated from -20 to +50°C (-4 to +122°F). PA is polyamide rated from -20 to +70°C (-4 to +158°F).
(b) C = TA with compression terminals; RL = TA with ring lug terminals.
(c) See Table 3 for cable part numbers and specifications.
(d) See Table 2 for Termination Assembly certification definitions.

Table 2. Certification for Termination Assemblies

Type	Certification
Type 1	TAs are UL/UL-C listed as suitable for use in Class I; Groups A-D; Division 2 temperature code T4 hazardous locations. They are CENELEC (DEMKO) certified EEx nA IIC T4 for use in Zone 2 potentially explosive atmospheres.
Type 2	TAs are UL/UL-C listed as associated apparatus for supplying non-incendive field circuits Class I; Groups A-D; Division 2 hazardous locations when connected to specified 200 Series FBMs and field circuits meeting entity parameter constraints specified in *Standard and Compact 200 Series Subsystem User's Guide* (B0400FA). They are also CENELEC (DEMKO) certified as associated apparatus for supplying field circuits for Group IIC, Zone 2 potentially explosive atmospheres. Field circuits are also Class 2 limited energy (60 V dc, 30 V ac, 100 VA or less) if customer-supplied equipment meets Class 2
Type 4	All field circuits are Class 2 limited energy (60 V dc, 30 V ac, 100 VA or less) if customer-supplied equipment meets Class 2 limits.
Type 5	The TA and its field circuitry are for use in only ordinary (non-hazardous) locations.

Table 3. Cables Types and Part Numbers

Cable Length m (ft)	Type 1 P/PVC[a]	Type 1 LSZH[b]	Type 1 H/XLPE[c]
0.5 (1.6)	P0916DA	P0928AA	P0916VA
1.0 (3.2)	P0916DB	P0928AB	P0916VB
2.0 (6.6)	P0931RM	P0928AC	P0931RR
3.0 (9.8)	P0916DC	P0928AD	P0916VC
5.0 (16.4)	P0916DD	P0928AE	P0916VD
10.0 (32.8)	P0916DE	P0928AF	P0916VE
15.0 (49.2)	P0916DF	P0928AG	P0916VF
20.0 (65.6)	P0916DG	P0928AH	P0916VG
25.0 (82.0)	P0916DH	P0928AJ	P0916VH
30.0 (98.4)	P0916DJ	P0928AK	P0916VJ

(a) P/PVC is polyurethane outer jacket and semi-rigid PVC primary conductor insulation. Temperature range: -20 to +80°C (-4 to +176°F).
(b) Low smoke zero halogen or low smoke free of halogen (LSZH) is a material classification used for cable jacketing. LSZH is composed of thermoplastic or thermoset compounds that emit limited smoke and no halogen when exposed to high sources of heat. Temperature range: -40 to +105°C (-40 to +221°F).
(c) H/XLPE is Hypalon outer jacket and XLPE (cross-linked polyethylene) primary conductor insulation. Temperature range: -40 to +90°C (-40 to +194°F). Hypalon cables are no longer available for purchase.

Use of Termination Assemblies in 100 Series Upgrade Subsystem

When an FBM237 is used to replace the 100 Series FBM37, it may use any of the appropriate termination assemblies listed above for the FBM37's field I/O wiring. Alternatively, the FBM237 can accept this field wiring through a Termination Assembly Adapter (TAA) instead of a termination assembly. This is discussed in *Termination Assembly Adapter Modules for 100 Series Upgrade* (PSS 31H-2W4).

DIMENSIONS – NOMINAL

[mm]
in

Compression Termination Assembly

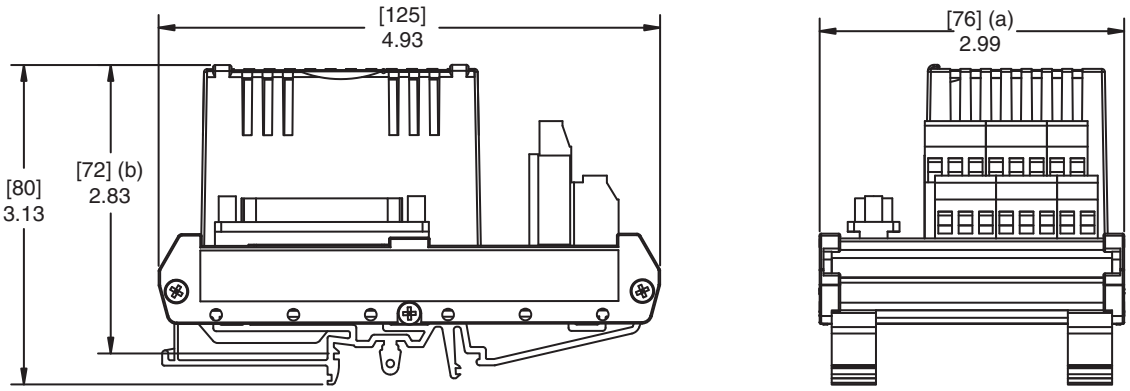

Ring Lug Termination Assembly

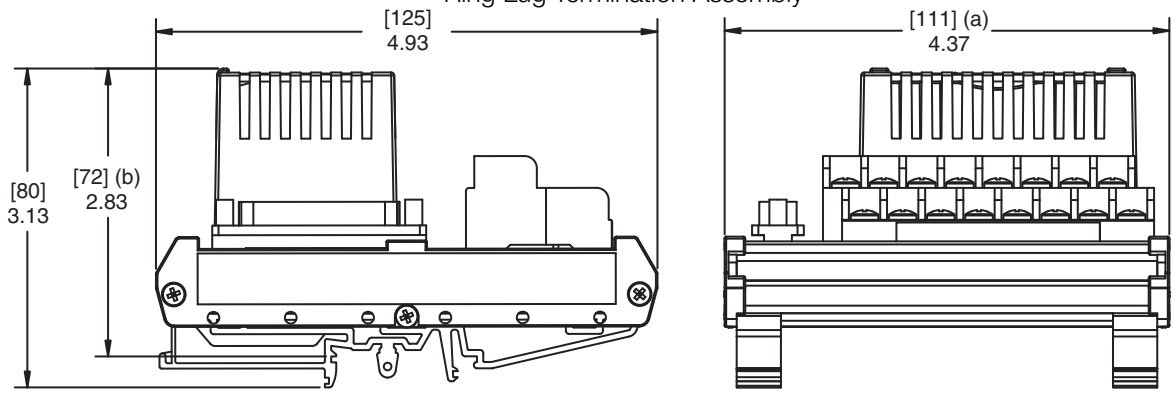

(a) Overall width – for determining DIN rail loading.
(b) Height above DIN rail (add to DIN rail height for total).

RELATED PRODUCT SPECIFICATION SHEETS (PSS)

PSS Number	Description
PSS 31H-2S200	Standard 200 Series Subsystem Overview
PSS 31H-2W100	100 Series Fieldbus Module Upgrade Subsystem Overview
PSS 31H-2CERTS	Standard and Compact 200 Series I/O - Agency Certifications
PSS 31H-2W4	Termination Assembly Adapter Modules for 100 Series Upgrade
PSS 31H-2SBASEPLT	Standard 200 Series Baseplates
PSS 31H-2W8	100 Series Conversion Mounting Structures
PSS 21S-3CP270ICS	Control Processor 270 (CP270) Integrated Control Software

Invensys Systems, Inc
10900 Equity Drive
Houston, TX 77041
United States of America
http://www.invensys.com

Global Customer Support
Inside U.S.: 1-866-746-6477
Outside U.S.: 1-508-549-2424
Website: https://support.ips.invensys.com

Copyright 2014 Invensys Systems, Inc.
All rights reserved.
Invensys is now part of Schneider Electric.

Invensys, Foxboro, and Foxboro Evo are trademarks owned by Invensys Limited, its subsidiaries and affiliates. All other trademarks are the property of their respective owners.

MB 031 1114