3300 XL NSv Proximity Transducer System

Datasheet

Cordant™

147385 Rev. R

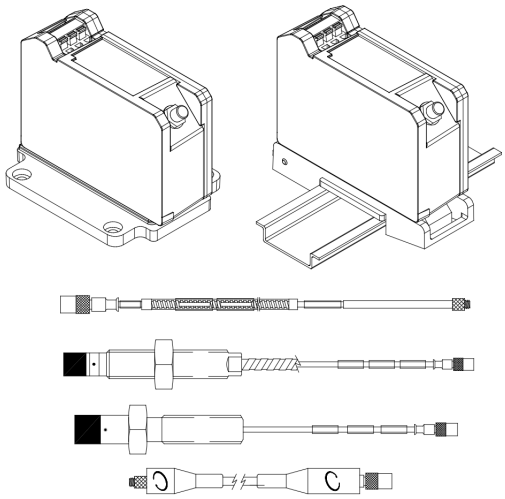

Description

The 3300 XL NSv Proximity Transducer system is intended for use with centrifugal air compressors, refrigeration compressors, process gas compressors, and other machines with tight installation requirements. The 3300 XL NSv Proximity Transducer System consists of:

- a 3300 NSv probe
- a 3300 NSv extension cable
- a 3300 XL NSv Proximitor Sensor(1)

The primary uses for the 3300 XL NSv Transducer System are for areas where counter bore, sideview, or rearview restrictions limit the use of standard Bently Nevada 3300 and 3300 XL 5 and 8 mm Transducer Systems. It is also ideal for small target applications, such as measuring radial vibration on shafts smaller than 51 mm (2 in) or axial position on flat targets smaller than 15 mm (0.6 in). It is primarily used in the following applications on fluid-filmed bearing machines where a small shaft or reduced side-view is present:

- Radial vibration and radial position measurements
- Axial (thrust) position measurements
- Tachometer and zero speed measurements
- Phase reference (Keyphasor signals)

The 3300 XL NSv Transducer System design allows it to replace both the 3300 RAM Transducer Systems and the 3000-series or 7000-series 190 Transducer System. Upgrades from the 3300 RAM system to the 3300 XL NSv system may use the existing probe, extension cable, and monitoring

Baker Hughes

ia	II 1 G Ex ia IIC T5...T1 Ga, (see Temperature Schedule table to follow) Ex ia IIIC T90°C ... T280°C Dc For EPL Dc: Ui= -28V, Ci = 1.5 nF Ii = 140 mA, Li =610 µH Pi = 0.91 W
nA,ec	II 3 G Ex nA IIC T5...T1 Gc, Ex ec IIC T5...T1 Gc, (see Temperature Schedule table to follow) Ui= -28V, Ii= 140 mA

Temperature Schedule

Temperature Classification	Ambient Temperature (Probe Only)
For EPL Ga and Gc	
T1	-55°C to +232°C
T2	-55°C to +177°C
T3	-55°C to +120°C
T4	-55°C to +80°C
T5	-55°C to +40°C
For EPL Dc	
T280°C @ Ta	-55°C to +232°C
T225°C @ Ta	-55°C to +177°C
T170°C @ Ta	-55C to +120°C
T130°C @ Ta	-55°C to +80°C
T105°C @ Ta	-55°C to +100°C
T90°C @ Ta	-55°C to +40°C

Hazardous Area Conditions of Safe Use

cNRTLus:

ia

Install per Bently Nevada drawing 141092.

nA, ec

Install per Bently Nevada drawing 140979.

ATEX/IECEx:

ia

Install per Bently Nevada drawing 141092.

nA, ec

The Proximitor must be installed so as to provide the terminals with a degree of protection of at least IP54.

Ordering Information

For the detailed listing of country and product-specific approvals, refer to the *Approvals Quick Reference Guide (108M1756)*.

For additional technical documentation, please log in to bntechsupport.com and access the Bently Nevada Media Library.

3300 NSv Proximity Probes

330901 3300 NSv Probe, 1/4-28 UNF thread, without armor
330902 3300 NSv Probe, 1/4-28 UNF thread, with armor
330908 3300 NSv Probe, 3/8-24 UNF thread, without armor
330909 3300 NSv Probe, 3/8-24 UNF thread, with armor
Part Number-AA-BB-CC-DD-EE
A: Unthreaded Length Option
Unthreaded length must be at least 0.7 inch less than the case length. Order in increments of 0.1 in Length configurations: Maximum unthreaded length: 9.2 in Minimum unthreaded length: 0.0 in Example: **04** = 0.4 in
B: Overall Case Length Option
Order in increments of 0.1 in Threaded length configurations: Maximum case length: 9.9 in Minimum case length: 0.8 in Example: **2 4** = 2.4 in
C: Total Length Option
05 0.5 meter (20 in)
10 1.0 meter (39 in)
50 5.0 meters (16.4 feet)
70 7.0 meters (23.0 feet)
D: Connector and Cable-Type Option
01 Miniature coaxial ClickLoc connector with connector protector, standard cable
02 Miniature coaxial ClickLoc connector, standard cable
11 Miniature coaxial ClickLoc connector with connector protector, FluidLoc cable
12 Miniature coaxial ClickLoc connector, FluidLoc cable
E: Agency Approval Option
00 Not required
05 Multiple Approvals

3300 NSv Proximity Probes, Metric

330903 3300 NSv Probe, M8X1 thread, without armor
330904 3300 NSv Probe, M8X1 thread, with armor
330905 3300 NSv Probe, M10X1 thread, without armor

330910 3300 NSv Probe, M10X1 thread, with armor	
Part Number-AA-BB-CC-DD-EE	
A: Unthreaded Length Option	
	Unthreaded length must be at least 20 mm less than the case length. Order in increments of 10 mm. Length configuration: Maximum unthreaded length: 230 mm Minimum unthreaded length: 0 mm Example: **06** = 60 mm
B: Overall Case Length Option	
	Order in increments of 10 mm. Metric thread configurations: Maximum length: 250 mm Minimum length: 20 mm Example: **06** = 60 mm
C: Total Length Option	
05	0.5 meter (20 in)
10	1.0 meter (39 in)
50	5.0 meters (16.4 feet)
70	7.0 meters (23.0 feet)
D: Connector and Cable-Type Option	
01	Miniature coaxial ClickLoc connector with connector protector, standard cable
02	Miniature coaxial ClickLoc connector, standard cable
11	Miniature coaxial ClickLoc connector with connector protector, FluidLoc cable
12	Miniature coaxial ClickLoc connector, FluidLoc cable
E: Agency Approval Option	
00	Not required
05	Multiple Approvals

3300 NSv Reverse Mount Probe

330906-02-12-CC-DD-EE 3/8-24 UNF threads	
330907-05-30- CC-DD-EE M10X1 threads	
C: Total Length Option	
05	0.5 meter (20 in)
10	1.0 meter (39 in)
50	5.0 meters (16.4 feet)
70	7.0 meters (23.0 feet)
D: Connector Option	
02	Miniature coaxial ClickLoc connector, standard cable
12	Miniature coaxial ClickLoc connector, FluidLoc cable
E: Agency Approval Option	
00	Not required

05	Multiple Approvals For a shorter delivery time, order commonly stocked probes. Currently, stocked probes consist of the following part numbers: 330901-00-24-05-02-00, 330901-00-90-05-02-00, 330902-00-50-05-02-00, 330902-00-95-05-02-00, 330903-00-02-10-02-00, 330903-00-03-10-02-00, 330906-02-12-05-02-00.

3300 XL NSv Proximitor Sensor

330980-AA-BB	
A: Total Length and Mounting Option	
50	5.0 meters (16.4 feet) system length, panel mount
51	5.0 meters (16.4 feet) system length, DIN mount
52	5.0 meters (16.4 feet) system length, no mounting hardware[1]
70	7.0 meters (23.0 feet) system length, panel mount
71	7.0 meters (23.0 feet) system length, DIN mount
72	7.0 meters (23.0 feet) system length, no mounting hardware[1]
B: Agency Approval Option	
00	Not required
05	Multiple approvals

3300 NSv Extension Cable

330930-AAA-BB-CC	
	Make sure that the extension cable length and the probe length, when added together, equal the Proximitor Sensor total length.
A: Cable Length Option	
040	4.0 meters (13.1 feet)
045	4.5 meters (14.8 feet)
060	6.0 meters (19.7 feet)
065	6.5 meters (21.3 feet)
B: Connector and Cable Option	
00	Without stainless steel armor
01	With stainless steel armor, with FEP jacket
02	With stainless steel armor, without FEP jacket
03	Without stainless steel armor, with connector protector
04	With stainless steel armor, with FEP jacket, with connector protector
05	With stainless steel armor, without FEP jacket, with connector protector
06	FluidLoc cable without stainless steel armor
07	FluidLoc cable with stainless steel armor, with FEP jacket
08	FluidLoc cable with stainless steel armor, without FEP jacket
09	FluidLoc without stainless steel armor, with connector protector

10	FluidLoc cable with stainless steel armor, with FEP jacket, with connector protector
11	FluidLoc cable with stainless steel armor, without FEP jacket, with connector protector
C: Agency Approval Option	
00	Not Required
05	Multiple Approvals

Accessories

147357	3300 XL NSv Proximitor User Guide
02120015	Bulk field wire. 1.0 mm² (18 AWG), 3 conductor, twisted, shielded cable with drain wire. Specify length in feet.
138492-01	Replacement panel-mount mounting pad
138493-01	Replacement DIN-mount mounting pad
01609137	BNC (F) to banana plugs
01609138	Proximitor Connector Test Pin wiring (two test pins to a BNC (F) connector)
40971-04	50 Ω cable with two BNC (M) connectors. Use this cable in combination with adapter 01609137 and adapter 01609138 when checking performance of the transducer system from the Proximitor Sensor test pin holes.
04310310	3300 XL Proximitor Sensor Panel-mount Screws. Package includes one 6-32 UNC thread forming mounting screw (supplied standard with 3300 XL Proximitor Housings [3300 XL option]).
03200006	Silicone self-fusing tape. A 9.1 meter (10 yard) roll of silicone tape to protect connectors. It is easy to install and provides excellent electrical isolation and protection from the environment. It is not recommended for use inside the casing of the machine.
40113-03	Connector Protector Kit for 3300 NSv probes and extension cables, including connector protectors and installation tools.
136536-01	Connector Protector Adapter. Allows connector protector installation tools manufactured prior to 1998 to be used with 75 Ω ClickLoc connectors.
40180-03	Connector Protectors. Package contains 10 pairs of connector protectors.
03800000	Male Connector Protector. Placed on the extension cable to connect to the female connector protector on the probe and provide environmental protection of connectors.
03800001	Female Connector Protector. Placed on the probe lead to connect to the male connector protector on the extension cable and provide environmental protection of connectors. Also placed on the extension cable to slide over the Proximitor Sensor connection and protect it from the environment.
330153-05	3300 NSv Connector Kit. Used on 3300 NSv probes and extension cables. Contains one set of male and female ClickLoc connectors, sleeves and one strip of silicone tape.

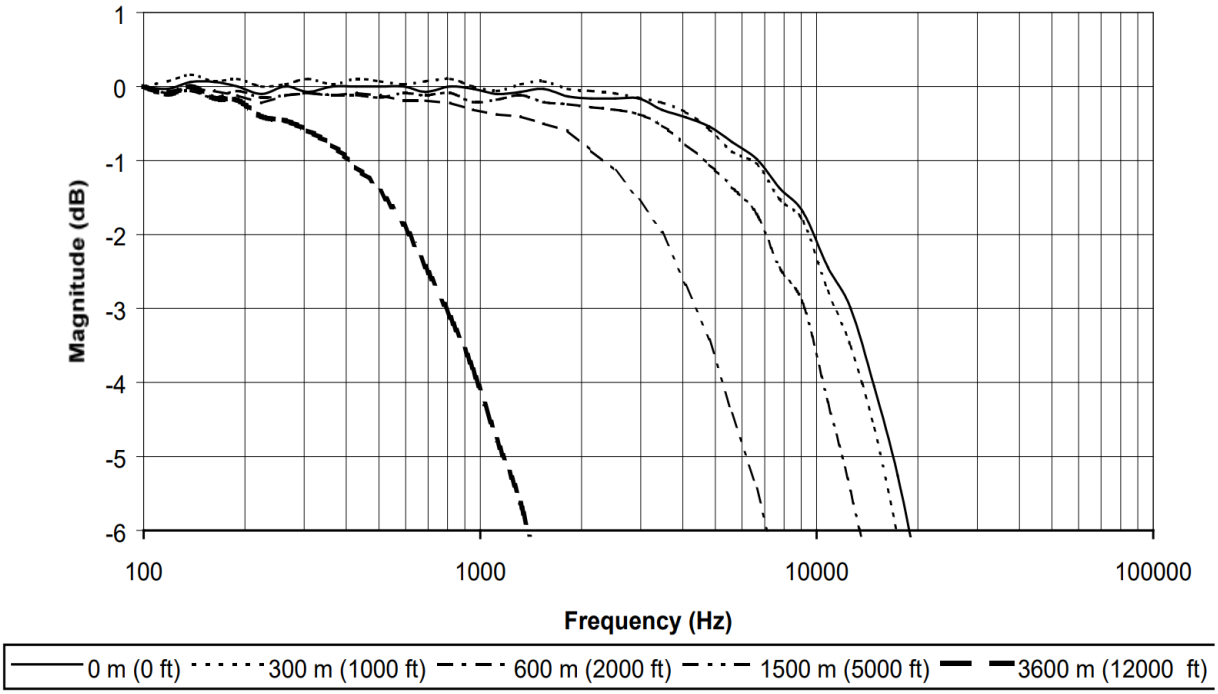

Figure 16: Frequency Response, magnitude of typical 3300 XL NSv System with various lengths of field wiring, no barriers

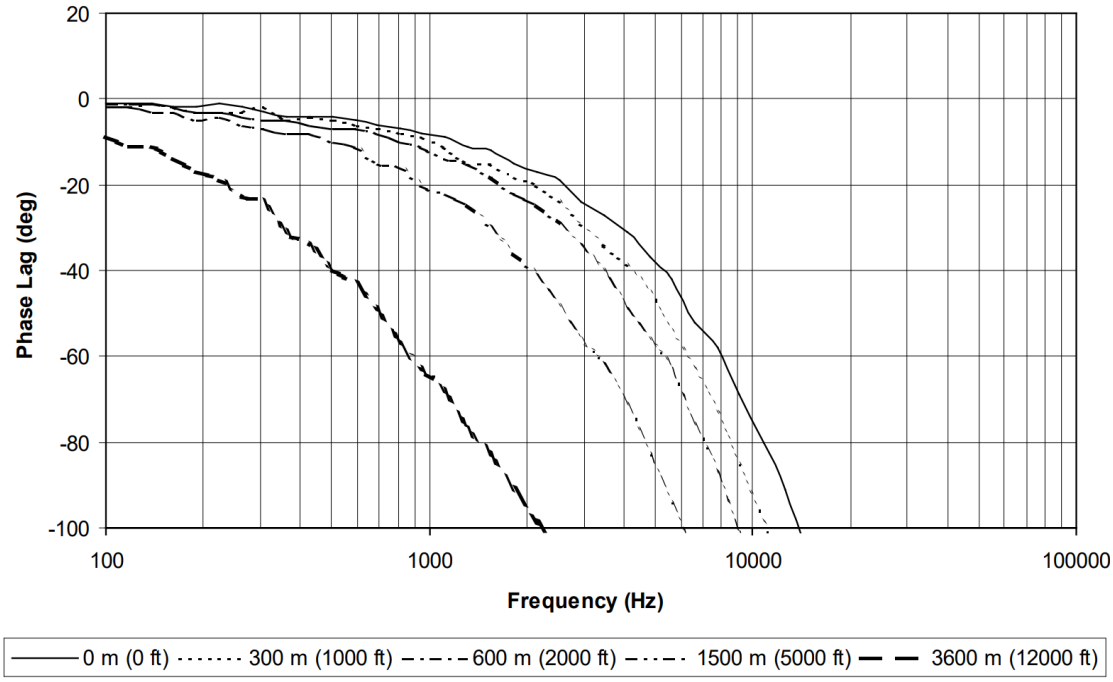

Figure 17: Frequency Response, phase change of typical 3300 XL NSv System with various lengths of field wiring, no barriers

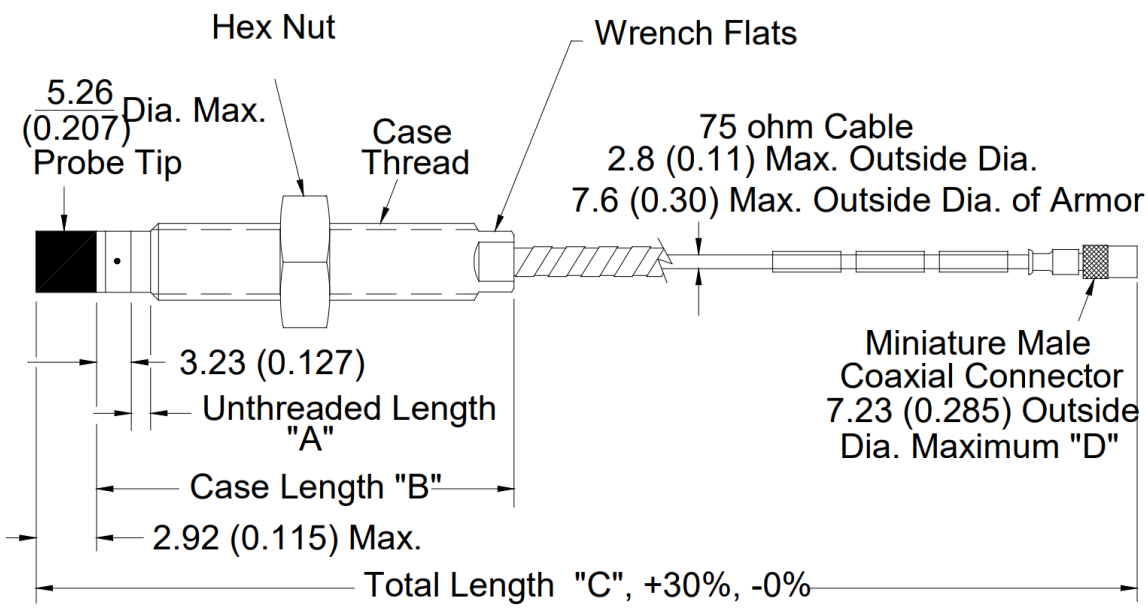

Figure 18: 3300 NSv Proximity probes, Standard Mount

330901, 1/4-28 UNF-2A, without armor

330902, 1/4-28 UNF-2A, with armor

330903, M8X1 thread, without armor

330904, M8X1 thread, with armor

330905, M10X1 thread, without armor

330908, 3/8-24 UNF-2A, without armor

330909, 3/8-24 UNF-2A, with armor

330910, M10X1 thread, with armor

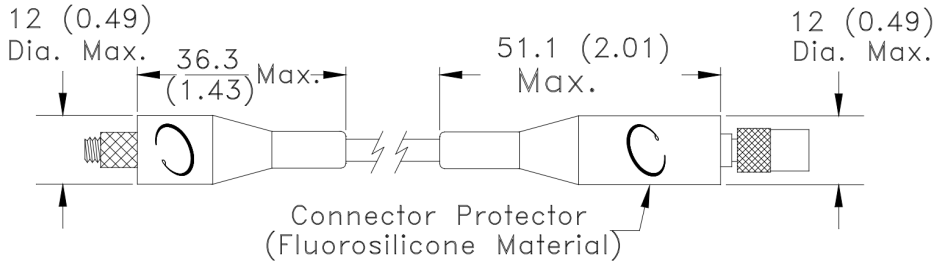

Note: Connector Protector only installed on female end when optioned. Both ends available as accessories.

Figure 19: Installed Connector Protectors

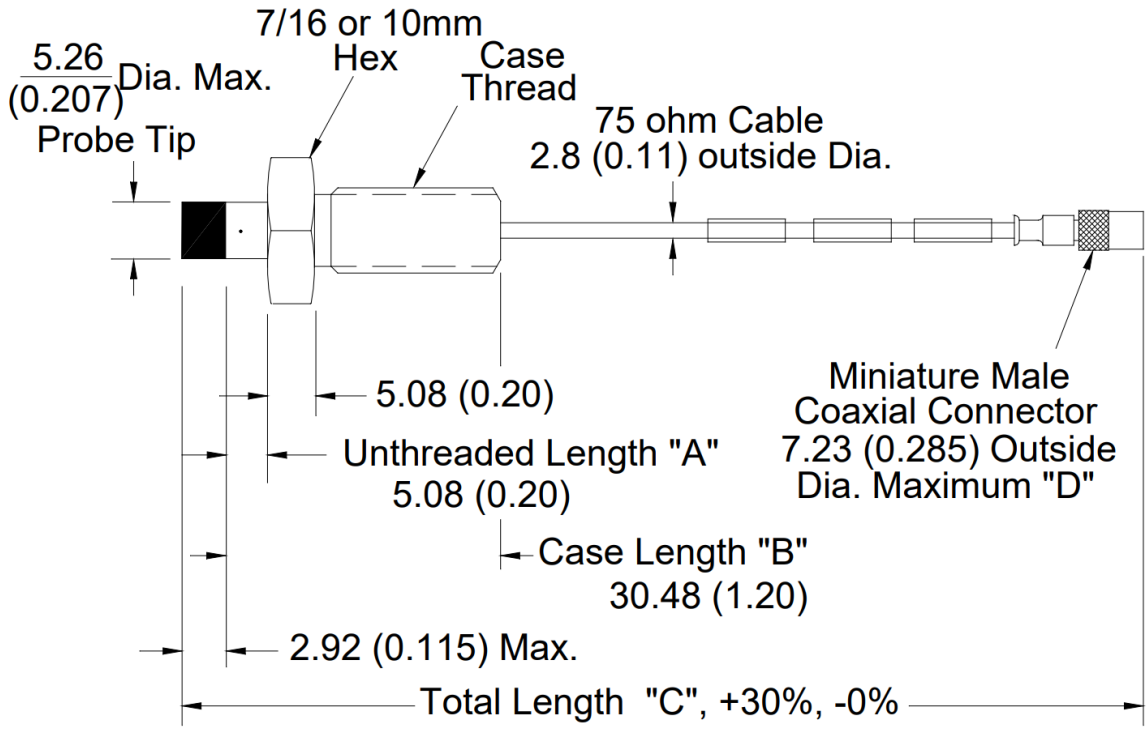

Figure 20: 3300 NSv Proximity Probes, Reverse Mount

330906, 3/8-24 UNF-2A threads

330907, M10X1 threads

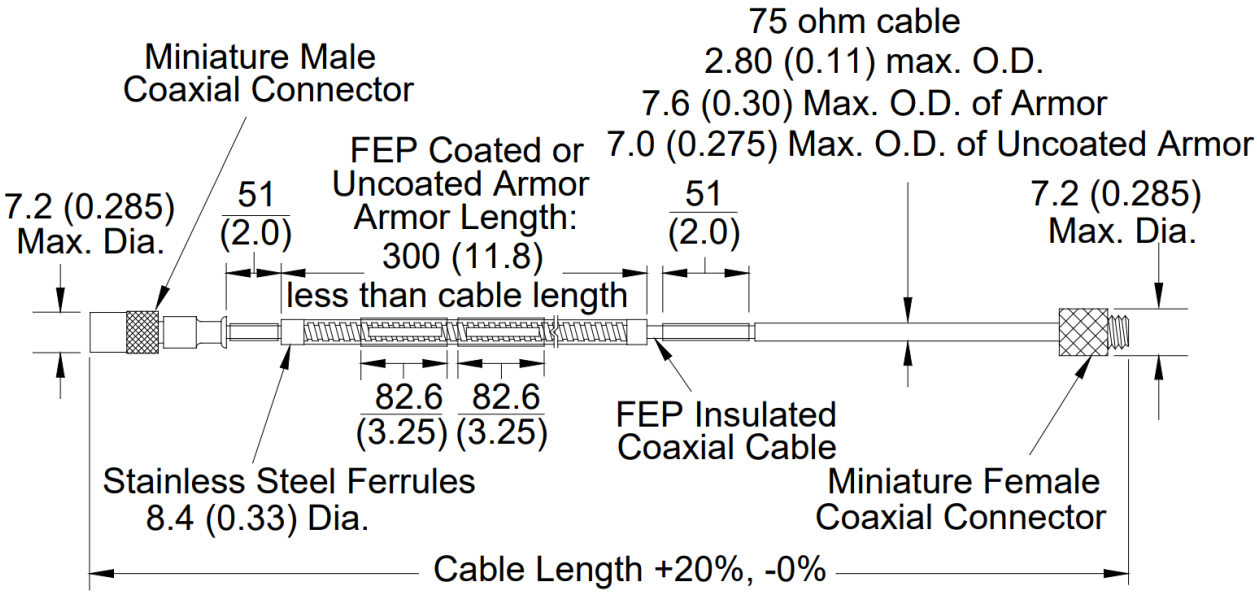

Figure 21: 330930, 3300 NSv Extension Cable

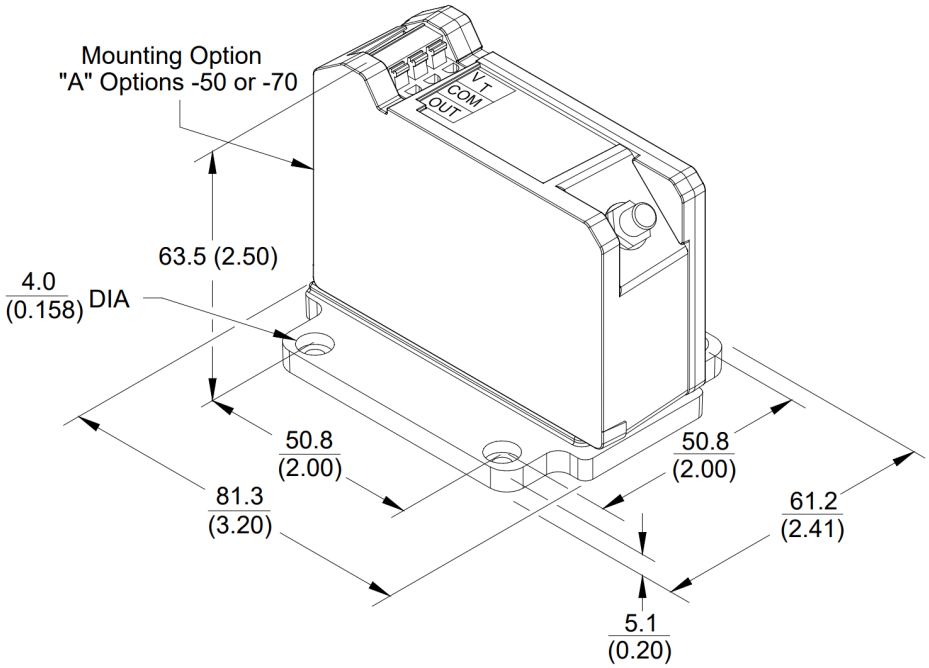

Figure 22: Panel Mount 3300 XL NSv Proximitor Sensor

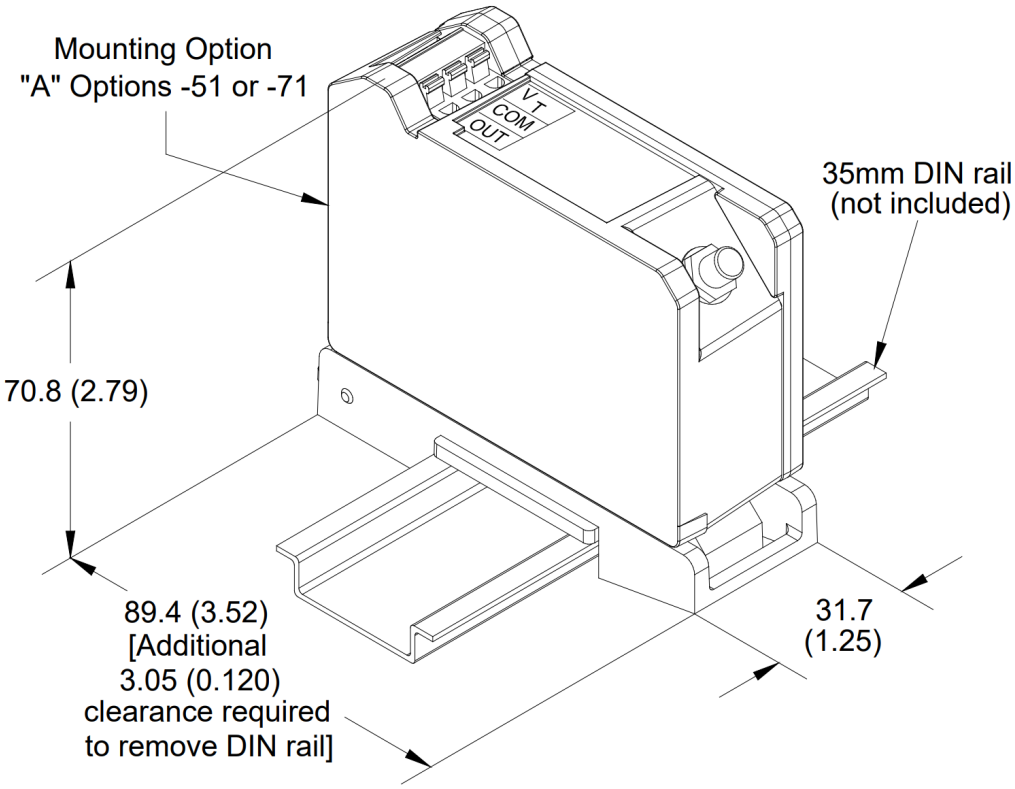

Figure 23: DIN Mount 3300 XL NSv Proximitor Sensor