3300 XL 50 mm Proximity Transducer System

Datasheet

Cordant™

174014 Rev. L

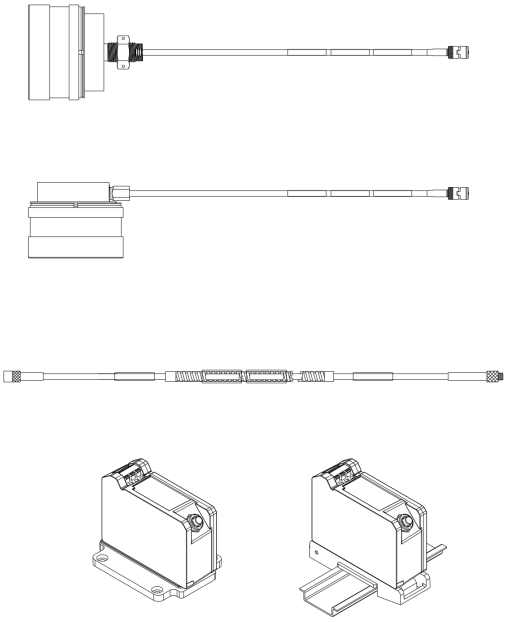

Description

The 3300 XL 50 mm Transducer System consists of a separate 50 mm probe, an extension cable, and a 3300 XL 50 mm Proximitor Sensor. The large diameter coil gives this system a maximum linear range of 27.9 mm (1100 mils), the longest linear range of our eddy current transducer line. This linear range makes the 3300 XL 50 mm Transducer System ideal for measuring the differential expansion (DE) or rotor expansion (RX) of large steam turbine generators that results from the difference in growth rates between the turbine rotor and the machine stator (casing).

Measuring Differential Expansion

The Differential Expansion measurement is made by using two proximity transducers that observe a collar or ramp some distance from the thrust bearing. Typical transducer mounting arrangements that require the 3300 XL 50 mm Transducer's long linear range include:

- Two transducers observing the same side of a collar.
- Two complementary input transducers observing opposite sides of a collar, effectively doubling the measurable DE range.

The criteria for selecting a mounting method are the size of the available target, the expected amount of rotor axial movement, and the type of DE target that exists in the machine. If the collar height is sufficient and the required total measurement range is less than 27.9 mm 1.1 inches, the preferred configuration for redundant measurements is to use two transducers observing the same side of a collar. When 28 mm to 56 mm (1.1 to 2.2 inches) of total range are required, install the transducers in a complementary fashion

Baker Hughes

Ordering Information

For the detailed listing of country and product-specific approvals, refer to the *Approvals Quick Reference Guide (108M1756)*.

For additional technical documentation, please log in to bntechsupport.com and access the Bently Nevada Media Library.

3300 XL 50 mm Proximity Probe

330876-AA-BB-CC-DD

A: Probe Case Type Option	
0 1	½-20 Thread
0 2	M14x1.5 Thread
0 3	Smooth 1.99 in dia - Side Exit
B: Total Length Option	
1 0	1.0 meter (3.3 feet)
5 0	5.0 meters (16.4 feet)
9 0	9.0 meters (29.5 feet) Five meter probes are designed for use with the five meter Proximitor Sensor only.
C: ArmorOption	
0 0	High Temperature FluidLoc Cable
0 1	High Temperature FluidLoc Cable with Armor
D: Agency Approval Option	
0 0	No Approvals
0 5	Multiple Approvals

3300 XL 50 mm Proximitor Sensor

330878-AA-BB

A: Total Length and Mounting Option	
5 0	5.0 meters (16.4 feet) system length, panel mount
5 1	5.0 meters (16.4 feet) system length, DIN mount
9 0	9.0 meters (29.5 feet) system length, panel mount
9 1	9.0 meters (29.5 feet) system length, DIN mount
B: Agency Approval Option	
0 0	No Approvals
0 5	Multiple Approvals

3300 XL 50 mm Extension Cable

330877-AAA-BB-CC

Make sure that the extension cable length and the probe length, when added together, equal the Proximitor Sensor total length.

A: Cable Length Option	
0 4 0	4.0 meters (13.1 feet)
0 8 0	8.0 meters (26.2 feet)
B: Armor and Cable Option	
3 6	FluidLoc cable
3 7	FluidLoc ext. cable w/ armor
C: Agency Approval Option	
0 0	No Approvals
0 5	Multiple Approvals

Mounting Brackets

Each Sliding Mounting Bracket comes with:

- One sliding plate
- One base plate
- Sliding plate securing bolts with safety wire holes
- Lock washers

The material used for the mounting brackets is T6061-T6 aluminum. Base plate securing bolts are not provided; recommended bolt size is 3/8in or M8 socket head bolts.

3300 XL 50 mm Sliding Probe Bracket and Clamp

330879-AA-BB

A: Probe Clamp Style	
0 1	Left Exit
0 2	Right Exit
0 3	Two clamps (used for CIDE applications)1
B: DE Mounting Bracket	
0 0	No Mounting Bracket; Clamp Only (4)
0 1	Single DE Mounting Bracket (2)
0 2	Short CIDE Mounting Bracket (3)
0 3	Long CIDE Mounting Bracket (3)

This bracket is recommended for most installations. While any probe may be used, the smooth side exit probe is most often used with this bracket.

(1) When ordering two clamps, one right exit and one left exit clamp will be provided so that the cables exit from the same side of the CIDE bracket.

(2) The B01 probe mounting bracket option is only available with the A01 or A02 probe clamp style options.

(3) The B02 and B03 probe mounting bracket options are only available with the A03 probe clamp style options.

(4) When replacing 50 mm DE 130713, part number 330879-AA-00 should be ordered. Ordering with BB=00 will prevent unnecessary parts from being ordered with the clamp.

Sliding Mounting Brackets without clamps

131071-01	Single Transducer Mounting Bracket
131030-01	Short Complementary Input Differential Expansion (CIDE) Mounting Bracket
131031-01	Long Complementary Input Differential Expansion (CIDE) Mounting Bracket

Non-sliding Mounting Brackets

167285	Kit, 50 mm Clamp Mount (used with smooth-case side exit or threaded straight exit probes).
167286	Kit, 50 mm Bolt Mount (used only with smooth-case side exit probes).

Verification Kits

Each verification kit comes with:

- a verification kit bracket
- a spindle micrometer with either a 0 to 2 in. or 0 to 50 mm range
- two set screws
- a bracket securing bolt

The material used for the verification kit bracket is T6061-T6 aluminum.

131036-01	Verification Kit, Spindle Micrometer with English Units
131036-02	Verification Kit, Spindle Micrometer with Metric Units

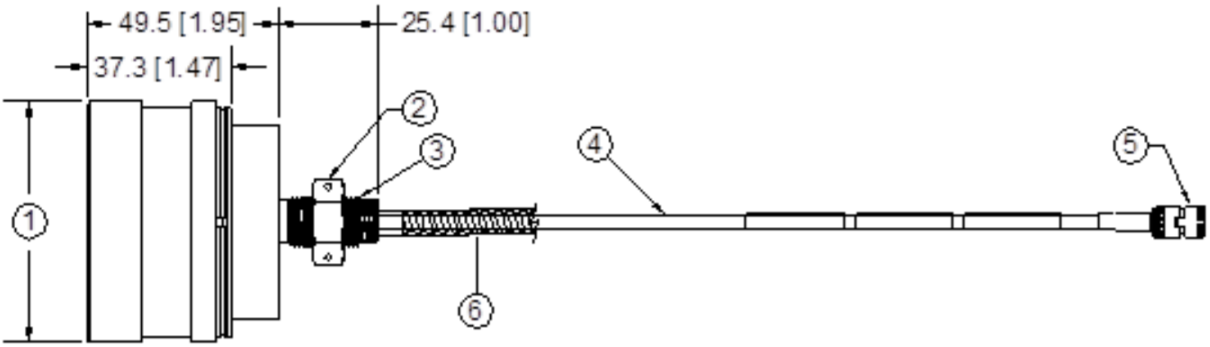

1. 62.2 mm (2.45 in) maximum diameter
2. 3/4-in or 21 mm diameter jam nut with safety wire holes
3. Case thread
4. FluidLoc coaxial cable with PFA Jacket, 3.94 mm (0.155 in) maximum diameter.
5. Miniature male coaxial connector, 8.0 mm (0.32 in) maximum diameter.
6. Optional Stainless steel armor with PFA jacket, 9.58 mm (0.377 in) maximum diameter; 12.7 mm (0.50 in) maximum diameter of armored ferrule.

Figure 10: 330876, 3300 XL 50 mm Proximity Probe, Straight Exit

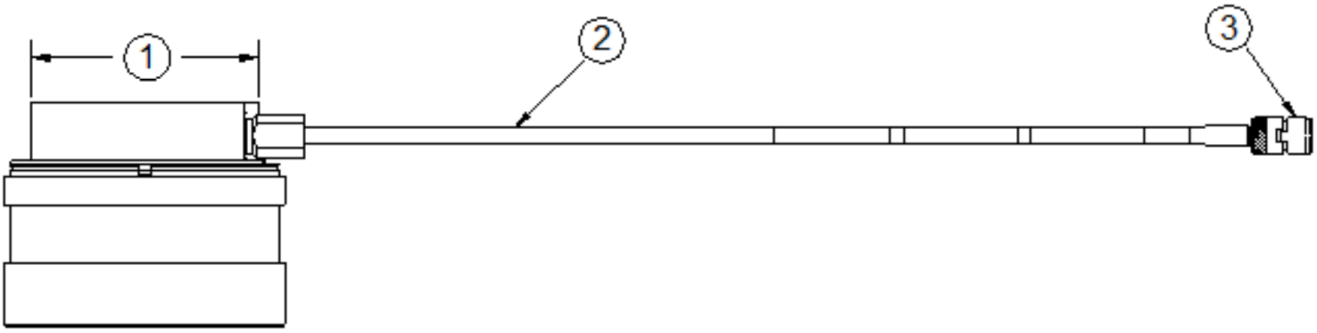

1. 50.5 mm (1.99 in) diameter
2. FluidLoc coaxial cable with PFA Jacket, 3.94 mm (0.155 in) maximum diameter.
3. Miniature male coaxial connector, 8.0 mm (0.32 in) maximum diameter.

Figure 11: 330876, 3300 XL 50 mm Proximity Probe, Smooth 1.99 Inch Dia. Side Exit Case

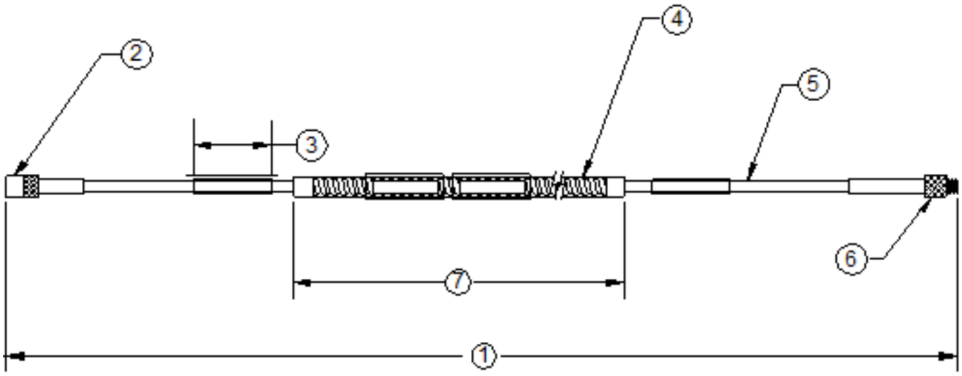

1. Cable length +20%, -0%
2. Miniature male coaxial connector, 7.2 mm (0.29 in) maximum diameter
3. Customer shrink tubing, 84 mm (3.3 in), 2 places
4. Optional stainless steel armor with PFA jacket, 7.65 mm (0.301 in) maximum diameter; 10.12 mm (0.0400 in) maximum diameter of armored ferrule.
5. FluidLoc coaxial cable with PFA Jacket, 3.94 mm (0.155 in) maximum diameter
6. Miniature female coaxial connector, 7.24 mm (0.285 in) maximum diameter
7. Armor Length = Cable Length – 300 mm (11.8 in)

Figure 12: 330877, 3300 XL 50 mm Extension Cable

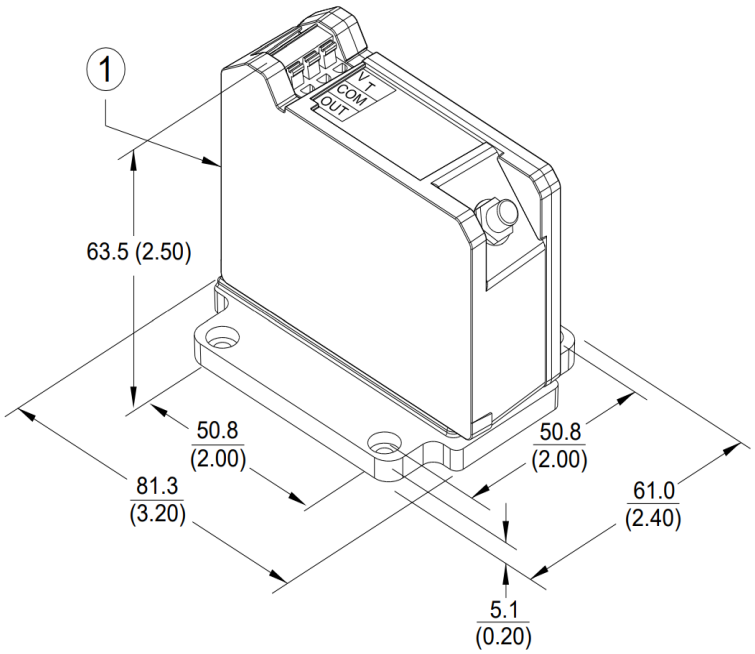

Mounting Option "A" –50 or -90

Figure 13: 330878 Panel Mount 3300 XL 50 mm Proximitor Sensor

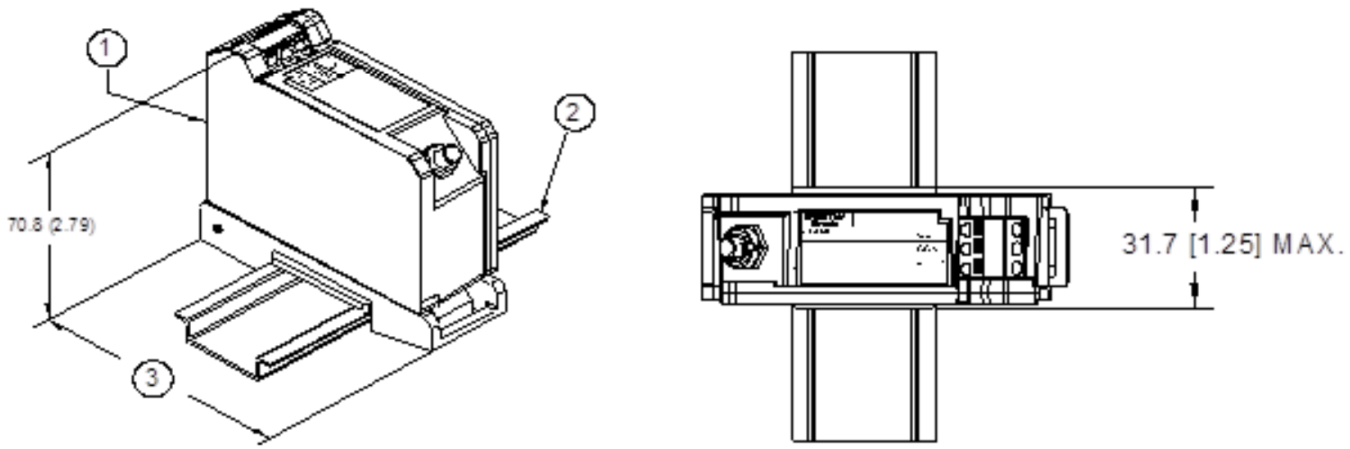

1. Mounting option "A" –51 or –91
2. 35mm DIN rail (not included)
3. 89.4 mm (3.52 in) (additional 3.05 mm (0.120 in) required to remove DIN rail)

Figure 14: 330878 DIN Mount 3300 XL 50 mm Proximitor Sensor

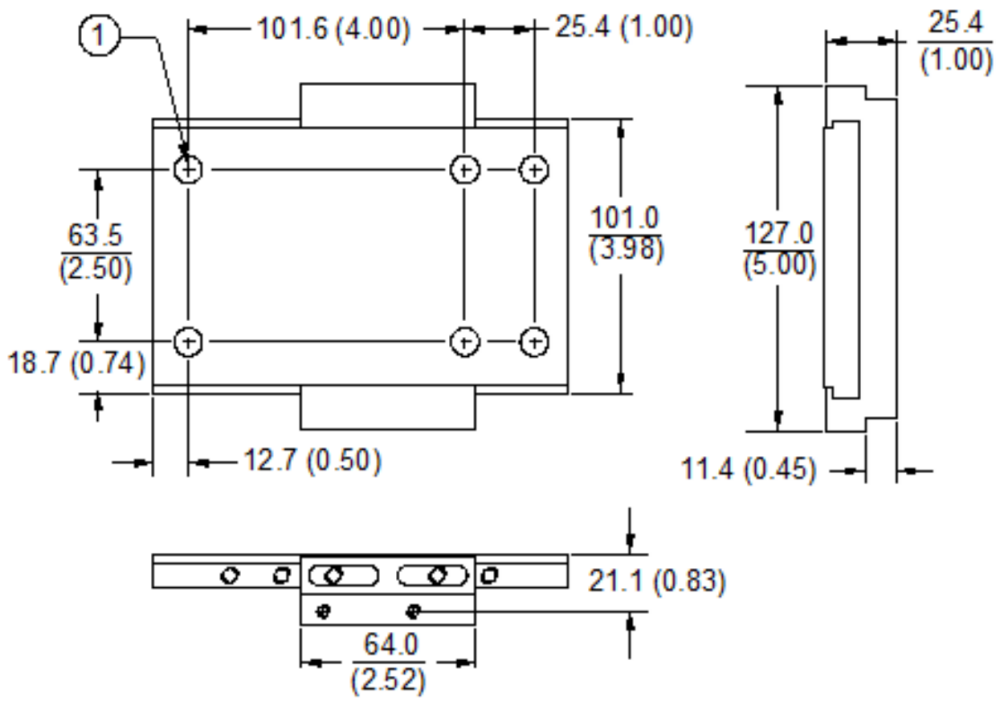

1. 10(0.40) diameter through, 15 (0.61) counterbore typical

Figure 15: 131071-01 Single Transducer Mounting Bracket

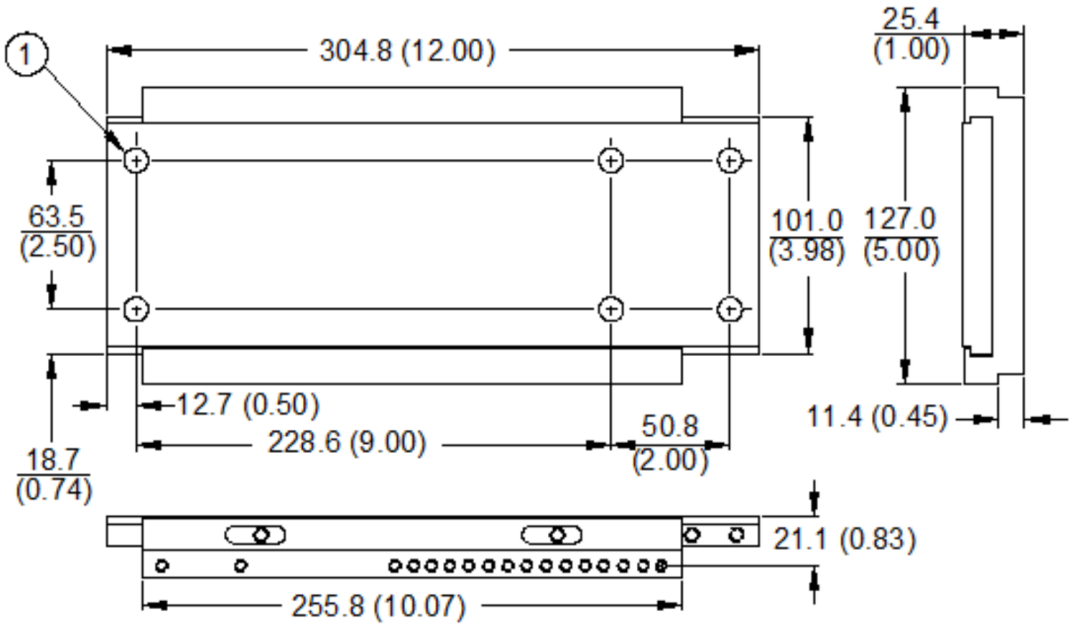

1. 10(0.40) diameter through, 15 (0.61) counterbore typical

Figure 16: 131030-01 Short Complementary Input Differential Expansion (CIDE) Mounting Bracket

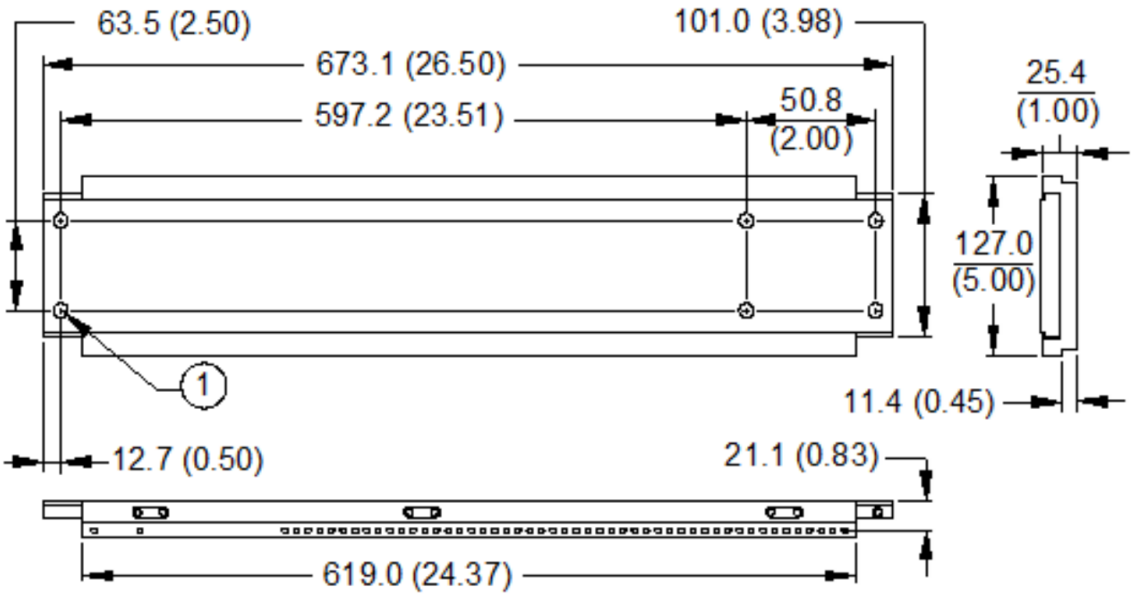

1. 10 (0.40) diameter through, 15 (0.61) counterbore typical

Figure 17: 131031-01 Long Complementary Input Differential Expansion (CIDE) Mounting Bracket