SIEMENS

SIMATIC NET

Industrial Ethernet Switches SCALANCE X-300

Compact Operating Instructions

Introduction 1

Safety instructions 2

Security recommendations 3

Device description 4

Installation and disassembly 5

Connecting 6

Maintenance and cleaning 7

Technical data 8

Dimension drawings 9

Certifications and approvals 10

05/2023

A5E00982643-20

Legal information

Warning notice system

This manual contains notices you have to observe in order to ensure your personal safety, as well as to prevent damage to property. The notices referring to your personal safety are highlighted in the manual by a safety alert symbol, notices referring only to property damage have no safety alert symbol. These notices shown below are graded according to the degree of danger.

⚠ DANGER
indicates that death or severe personal injury **will** result if proper precautions are not taken.

⚠ WARNING
indicates that death or severe personal injury **may** result if proper precautions are not taken.

⚠ CAUTION
indicates that minor personal injury can result if proper precautions are not taken.

NOTICE
indicates that property damage can result if proper precautions are not taken.

If more than one degree of danger is present, the warning notice representing the highest degree of danger will be used. A notice warning of injury to persons with a safety alert symbol may also include a warning relating to property damage.

Qualified Personnel

The product/system described in this documentation may be operated only by **personnel qualified** for the specific task in accordance with the relevant documentation, in particular its warning notices and safety instructions. Qualified personnel are those who, based on their training and experience, are capable of identifying risks and avoiding potential hazards when working with these products/systems.

Proper use of Siemens products

Note the following:

⚠ WARNING
Siemens products may only be used for the applications described in the catalog and in the relevant technical documentation. If products and components from other manufacturers are used, these must be recommended or approved by Siemens. Proper transport, storage, installation, assembly, commissioning, operation and maintenance are required to ensure that the products operate safely and without any problems. The permissible ambient conditions must be complied with. The information in the relevant documentation must be observed.

Trademarks

All names identified by ® are registered trademarks of Siemens AG. The remaining trademarks in this publication may be trademarks whose use by third parties for their own purposes could violate the rights of the owner.

Disclaimer of Liability

We have reviewed the contents of this publication to ensure consistency with the hardware and software described. Since variance cannot be precluded entirely, we cannot guarantee full consistency. However, the information in this publication is reviewed regularly and any necessary corrections are included in subsequent editions.

Siemens AG
Digital Industries
Postfach 48 48
90026 NÜRNBERG
GERMANY

A5E00982643-20
Ⓟ 05/2023 Subject to change

Copyright © Siemens AG 2010 - 2023.
All rights reserved

Table of contents

1 Introduction ... 5

2 Safety instructions ... 11

3 Security recommendations ... 13

4 Device description ... 19

4.1 Product overview ... 19

4.2 Product properties and device views ... 23
4.2.1 SCALANCE X304-2FE ... 23
4.2.2 SCALANCE X306-1LD FE ... 24
4.2.3 SCALANCE X307-3 ... 25
4.2.4 SCALANCE X307-3LD ... 26
4.2.5 SCALANCE X308-2 ... 27
4.2.6 SCALANCE X308-2LD ... 28
4.2.7 SCALANCE X308-2LH ... 29
4.2.8 SCALANCE X308-2LH+ ... 30
4.2.9 SCALANCE X310 ... 31
4.2.10 SCALANCE X310FE ... 32
4.2.11 SCALANCE X320-1FE ... 33
4.2.12 SCALANCE X320-3LD FE ... 34

4.3 SET/SELECT button ... 35

4.4 LED display ... 36

4.5 C-PLUG ... 40
4.5.1 Area of application and function of the C-PLUG ... 40
4.5.2 Removing and inserting the C-PLUG (compact housing) ... 40

5 Installation and disassembly ... 43

5.1 Safety notices for installation ... 43

5.2 Requirements for the cabinet EN 60529 (ATEX), UKEX, IECEx and CCC-Ex ... 45

5.3 Installation on a DIN rail ... 47

5.4 Installation on a standard rail ... 49

5.5 Wall mounting ... 50

6 Connecting ... 51

6.1 Safety when connecting up ... 51

6.2 Risk of explosion when pressing the button (ATEX, IECEx) ... 53

6.3 Wiring rules ... 56

6.4 Connecting the switch ... 57

6.5 Connecting functional ground ... 58

6.6 24 VDC signaling contact ... 59

6.7 Power supply 60
7 Maintenance and cleaning 63
8 Technical data 65
8.1 Construction, installation and environmental conditions 66
8.2 Connectors and electrical data 68
8.3 Cable lengths 71
8.4 Other properties 73
9 Dimension drawings 75
10 Certifications and approvals 81
Index 89

Introduction 1

Purpose of the compact operating instructions

The compact operating instructions are intended to provide you with the information you require to install and connect a device of the SCALANCE X-300 product line correctly.

Validity of these compact operating instructions

These compact operating instructions apply to the SCALANCE X-300 product group within the SCALANCE X-300 product line:

- SCALANCE X304-2FE
- SCALANCE X306-1LD FE
- SCALANCE X307-3
- SCALANCE X307-3LD
- SCALANCE X308-2
- SCALANCE X308-2LD
- SCALANCE X308-2LH
- SCALANCE X308-2LH+
- SCALANCE X310
- SCALANCE X310FE
- SCALANCE X320-1FE
- SCALANCE X320-3LD FE

Designations used

Classification	Description	Terms used
Product line	For all devices and variants of all product groups within the SCALANCE X-300 product line, the term IE Switches X-300 is used.	IE Switches X-300
Product group	For all devices and variants of a product group, only the product group is used.	SCALANCE X-300
Device	For a device, only the device name is used.	SCA- LANCE X306-1LD FE
Variant	For a variant of the device, the device name has the appropriate variant added to it in brackets.	(-)

Overview of technical documentation on the IE switches SCALANCE X-300

You will find the technical documentation for the SCALANCE X-300 product line in the following documents:

- Configuration manual (PH), available as PDF document
  The configuration manual describes the software for the two product lines SCALANCE X-300 and SCALANCE X-400.
- Compact operating instructions (BAK), supplied with the device in printed form
  The compact operating instructions describe devices within a product group.
- Operating instructions (BA), available as PDF document
  The operating instructions describe all devices of the product line and provide generally valid information on the devices.

Type of document	Relevant for the following products	Document identification number	Contents
Configuration Manual			
PH X300/X400	All devices of the SCALANCE X-300 and SCALANCE X-400 product lines	C79000-G89000-C187	Configuration of the device
Operating instructions			
BA X-300	All devices of the SCALANCE X-300 product line	A5E01113043	Device description, technical specifications, information on installing, connecting and commissioning
Compact operating instructions			
BAK X-300	SCALANCE X-300	A5E00982643A	Device description, technical specifications, information on installing, connecting and commissioning
BAK X-300M	SCALANCE X-300M	A5E02630801A	
BAK XR-300M	SCALANCE XR-300M	A5E02661171A	
BAK X-300 EEC	SCALANCE X-300EEC	A5E02661176A	
BAK XR-300M EEC	SCALANCE XR-300M EEC	A5E02630809A	
BAK X-300M PoE	SCALANCE X-300M PoE	A5E02630810A	
BAK XR-300M PoE	SCALANCE XR-300M PoE	A5E02661178A	
BAK MM900	SCALANCE MM900 (media modules)	A5E02630805A	
BAK SFP Information sheet	SCALANCE SFP (plug-in transceivers)	A5E02630804A A5E02648904A	Device description, technical specifications, information on installing, connecting and commissioning

Documentation on configuration

You will find detailed information on configuring the devices in the configuration manual:

- SIMATIC NET: Industrial Ethernet switches SCALANCE X-300 / X-400 Configuration Manual

You will find the Configuration Manual here:

- On the data medium that ships with some products:
  - Product CD / product DVD
  - SIMATIC NET Manual Collection
- On the Internet pages of Siemens Industry Online Support (https://support.industry.siemens.com/cs/ww/en/ps/15297/man).

Additional documentation

The manual

- "SIMATIC NET Industrial Ethernet Twisted Pair and Fiber Optic Networks (https://support.industry.siemens.com/cs/ww/en/view/1172207)"

contains additional information on other SIMATIC NET products that you can operate along with the devices of the SCALANCE X-300 product line in an Industrial Ethernet network.

Integration in STEP 7 projects

The current GSDML file must be used for integration in STEP 7 V5.4 SP5 projects. This applies to all products covered by these operating instructions.

You can obtain the relevant GSD file from the Internet under the following entry ID:

46183514 (https://support.industry.siemens.com/cs/ww/en/view/46183514)

You will find the file for the firmware update V3.3.1 for X-300 under entry ID "46183538".

Further documentation

In the system manuals "Industrial Ethernet / PROFINET Industrial Ethernet" and "Industrial Ethernet / PROFINET passive network components", you will find information on other SIMATIC NET products that you can operate along with the devices of this product line in an Industrial Ethernet network.

There, you will find among other things optical performance data of the communications partner that you require for the installation.

You will find the system manuals here:

- On the data medium that ships with some products:
  - Product CD / product DVD
  - SIMATIC NET Manual Collection
- On the Internet pages of Siemens Industry Online Support:
  - Industrial Ethernet / PROFINET Industrial Ethernet System Manual (https://support.industry.siemens.com/cs/ww/en/view/27069465)
  - Industrial Ethernet / PROFINET Passive Network Components System Manual (https://support.industry.siemens.com/cs/ww/en/view/84922825)

SIMATIC NET manuals

You will find the SIMATIC NET manuals here:

- On the Internet pages of Siemens Industry Online Support (https://support.industry.siemens.com/cs/ww/en/ps/15247).

SIMATIC NET glossary

Explanations of many of the specialist terms used in this documentation can be found in the SIMATIC NET glossary.

You will find the SIMATIC NET glossary here:

- SIMATIC NET Manual Collection or product DVD
  The DVD ships with certain SIMATIC NET products.
- On the Internet under the following address:
  50305045 (https://support.industry.siemens.com/cs/ww/en/view/50305045)

Security information

Siemens provides products and solutions with industrial security functions that support the secure operation of plants, systems, machines and networks.

In order to protect plants, systems, machines and networks against cyber threats, it is necessary to implement – and continuously maintain – a holistic, state-of-the-art industrial security concept. Siemens' products and solutions constitute one element of such a concept.

Customers are responsible for preventing unauthorized access to their plants, systems, machines and networks. Such systems, machines and components should only be connected to an enterprise network or the internet if and to the extent such a connection is necessary and only when appropriate security measures (e.g. firewalls and/or network segmentation) are in place.

For additional information on industrial security measures that may be implemented, please visit
https://www.siemens.com/industrialsecurity (http://www.siemens.com/industrialsecurity).

Siemens' products and solutions undergo continuous development to make them more secure. Siemens strongly recommends that product updates are applied as soon as they are available and that the latest product versions are used. Use of product versions that are no longer supported, and failure to apply the latest updates may increase customer's exposure to cyber threats.

To stay informed about product updates, subscribe to the Siemens Industrial Security RSS Feed under
https://www.siemens.com/cert (https://www.siemens.com/cert).

Catalogs

You will find the article numbers for the Siemens products of relevance here in the following catalogs:

- SIMATIC NET Industrial Communication / Industrial Identification, catalog IK PI
- SIMATIC Products for Totally Integrated Automation and Micro Automation, catalog ST 70
- Industry Mall - catalog and ordering system for automation and drive technology, Online catalog (https://mall.industry.siemens.com/goos/WelcomePage.aspx?regionUrl=/de&language=en)

You can request the catalogs and additional information from your Siemens representative.

Device defective

If a fault develops, send the device to your SIEMENS representative for repair. Repairs on-site are not possible.

Decommissioning

Shut down the device properly to prevent unauthorized persons from accessing confidential data in the device memory.

To do this, restore the factory settings on the device.

Also restore the factory settings on the storage medium.

Recycling and disposal

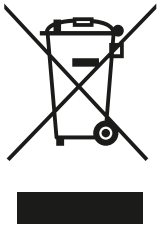

The products are low in pollutants, can be recycled and meet the requirements of the WEEE directive 2012/19/EU for the disposal of electrical and electronic equipment.

Do not dispose of the products at public disposal sites.

For environmentally friendly recycling and the disposal of your old device contact a certified disposal company for electronic scrap or your Siemens contact (Product return (https://support.industry.siemens.com/cs/ww/en/view/109479891)).

Note the different national regulations.

SCALANCE, C-PLUG, OLM

Trademarks

The following and possibly other names not identified by the registered trademark sign ® are registered trademarks of Siemens AG:

Safety instructions

2

Read the safety notices

Note the following safety notices. These relate to the entire working life of the device.

You should also read the safety notices relating to handling in the individual sections, particularly in the sections "Installation" and "Connecting up".

⚠ CAUTION
To prevent injury and damage, read the manual before using the device.

Safety notices on use in hazardous areas

General safety notices relating to protection against explosion

⚠ WARNING
EXPLOSION HAZARD Do not open the device when the supply voltage is turned on.

Safety notices when using the device according to Hazardous Locations (HazLoc)

If you use the device under HazLoc conditions you must also keep to the following safety notices in addition to the general safety notices for protection against explosion:

This equipment is suitable for use in Class I, Division 2, Groups A, B, C and D or non-hazardous locations only.

This equipment is suitable for use in Class I, Zone 2, Group IIC or non-hazardous locations only.

Security recommendations

3

NOTICE
Information security Connect to the device and change the standard passwords for the users "admin" and "user" before you operate the device. To be able to change passwords you need to be logged in with write access to the configuration data.

To prevent unauthorized access to the device and/or network, observe the following security recommendations.

General

- Check the device regularly to ensure that these recommendations and/or other internal security policies are complied with.
- Evaluate the security of your location and use a cell protection concept with suitable products (https://www.industry.siemens.com/topics/global/en/industrial-security/pages/default.aspx).
- When the internal and external network are disconnected, an attacker cannot access internal data from the outside. Therefore operate the device only within a protected network area.
- No product liability will be accepted for operation in a non-secure infrastructure.
- Use VPN to encrypt and authenticate communication from and to the devices.
- For data transmission via a non-secure network, use an encrypted VPN tunnel (IPsec, OpenVPN).
- Separate connections correctly (WBM, SSH etc.).
- Check the user documentation of other Siemens products that are used together with the device for additional security recommendations.
- Using remote logging, ensure that the system protocols are forwarded to a central logging server. Make sure that the server is within the protected network and check the protocols regularly for potential security violations or vulnerabilities.

Physical access

- Restrict physical access to the device to qualified personnel because the plug-in data medium can contain sensitive data.
- Lock unused physical interfaces on the device. Unused interfaces can be used to gain access to the plant without permission.

Software (security functions)

- Keep the firmware up to date. Check regularly for security updates for the device. You can find information on this at the Industrial Security (https://www.siemens.com/industrialsecurity) website.
- Inform yourself regularly about security recommendations published by Siemens ProductCERT (https://www.siemens.com/cert/en/cert-security-advisories.htm).
- Only activate protocols that you require to use the device.
- Restrict access to the management of the device with rules in an access control list (ACL).
- The option of VLAN structuring provides protection against DoS attacks and unauthorized access. Check whether this is practical or useful in your environment.
- Use a central logging server to log changes and accesses. Operate your logging server within the protected network area and check the logging information regularly.

Authentication

Note

Accessibility risk - Risk of data loss

Do not lose the passwords for the device. Access to the device can only be restored by resetting the device to factory settings which completely removes all configuration data.

- Replace the default passwords for all user accounts, access modes and applications (if applicable) before you use the device.
- Define rules for the assignment of passwords.
- Use passwords with a high password strength. Avoid weak passwords, (e.g. password1, 123456789, abcdefgh) or recurring characters (e.g. abcabc).
  This recommendation also applies to symmetrical passwords/keys configured on the device.
- Make sure that passwords are protected and only disclosed to authorized personnel.
- Do not use the same passwords for multiple user names and systems.
- Store the passwords in a safe location (not online) to have them available if they are lost.
- Regularly change your passwords to increase security.
- A password must be changed if it is known or suspected to be known by unauthorized persons.
- When user authentication is performed via RADIUS, make sure that all communication takes place within the security environment or is protected by a secure channel.
- Watch out for link layer protocols that do not offer their own authentication between endpoints, such as ARP or IPv4. An attacker could use vulnerabilities in these protocols to attack hosts, switches and routers connected to your layer 2 network, for example, through manipulation (poisoning) of the ARP caches of systems in the subnet and subsequent interception of the data traffic. Appropriate security measures must be taken for non-secure layer 2 protocols to prevent unauthorized access to the network. Physical access to the local network can be secured or secure, higher layer protocols can be used, among other things.

Certificates and keys

Note

ECDSA certificates for SCALANCE X300 and SCALANCE X408-2

The following applies to devices of the SCALANCE X-300 product series and devices of the SCALANCE X408-2 type (devices of the SCALANCE X414-3E type are not affected):

As of firmware version V4.1.4, there has been a conversion from RSA certificates to certificates for elliptic curves cryptography ("ECDSA certificates"). Only use ECDSA certificates in PEM format that were generated with the following curves:

- secp256r1 (NIST P-256)
- secp384r1 (NIST P-384)
- secp521r1 (NIST P-521)

RSA certificates are no longer supported as of this firmware version. The existing RSA certificates on the device are automatically replaced with self-signed ECDSA certificates.

- On the device there is a preset SSL certificate with the key length 256 bits for the elliptic-curves cryptography. Replace this certificate with a self-made certificate with key. We recommend that you use a certificate signed either by a reliable external or by an internal certification authority.
- Use a certification authority including key revocation and management to sign certificates.
- Make sure that user-defined private keys are protected and inaccessible to unauthorized persons.
- Verify certificates and fingerprints on the server and client to prevent "man in the middle" attacks.
- It is recommended that you use certificates with a key length of at least 256 bits.
- Change certificates and keys immediately if there is a suspicion of compromise.

Secure/non-secure protocols

- Avoid or disable non-secure protocols, for example Telnet and TFTP. For historical reasons, these protocols are available, however not intended for secure applications. Use non-secure protocols on the device with caution.
- Check whether use of the following protocols and services is necessary:
  - Non authenticated and unencrypted ports
  - MRP, HRP
  - LLDP
  - DHCP Options 66/67

  The following protocols provide secure alternatives:
  - HTTP → HTTPS
  - TFTP → FTPS
  - Telnet → SSH
  - SNTP → NTP
    Check whether use the use of NTP is necessary. NTP is classified as non-secure. Activate Secure NTP when the NTP server supports this protocol and use the authentication and encryption mechanisms of Secure NTP.
  - SNMPv1/v2c → SNMPv3
    Check whether use of SNMPv1/v2c. is necessary. SNMPv1/v2c are classified as non-secure. Use the option of preventing write access. The device provides you with suitable setting options.
    If SNMP is enabled, change the community names. If no unrestricted access is necessary, restrict access with SNMP.
    Use the authentication and encryption mechanisms of SNMPv3.
- Use secure protocols when access to the device is not prevented by physical protection measures.
- If you require non-secure protocols and services, operate the device only within a protected network area.
- Restrict the services and protocols available to the outside to a minimum.
- For the DCP function, enable the "DCP read-only" mode after commissioning.

Available protocols

The following list provides you with an overview of the open protocol ports.

The table includes the following columns:

- **Protocol**
- **Port number**
- **Port status**
  - Open
  - Closed

- **Factory setting**
  Indicates the state of the port on delivery or after reset to factory settings.
- **Authentication**
  Specifies whether the communication partner is authenticated.
- **Encryption**
  Specifies whether or not the transfer is encrypted.

Protocol	Port number	Port status	Factory setting	Authentication	Encryption [1]
FTP	TCP/21	Open	Open	✓	-
SSH	TCP/22	Open	Open	✓	✓
TELNET	TCP/23	Open (when configured)	Closed	✓	-
HTTP	TCP/80	Open (when configured)	Open	✓	-
PROFINET Service	TCP/84	Open	Open	-	-
HTTPS	TCP/443	Open	Open	✓	✓
DHCP	UDP/68	Open (when configured)	Open	-	-
SNTP	UDP/123	Open (when configured)	Closed	-	-
NTP (secure)					✓
SNMP	UDP/161	Open (when configured)	Open	✓	✓ (SNMPv3)
RADIUS	UDP/1812, 1813	Open	Open	✓	-
PROFINET	UDP/34964 UDP/49152, 49153 *)	Open (when configured)	Open	-	-

[1] You can find additional information on the encryption methods used in the WBM appendix "Ciphers used".

*) These ports are assigned dynamically and can differ from the values specified here.

Decommissioning

Shut down the device properly to prevent unauthorized persons from accessing confidential data in the device memory.

To do this, restore the factory settings on the device.

Also restore the factory settings on the storage medium.

Device description

4

4.1 Product overview

Article numbers

Device	Properties	Article number
X304-2FE	4 x 10/100 Mbps RJ-45 ports electrical 2 x 100 Mbps, SC ports optical, for glass FO cable (multi-mode), up to max. 750 m	6GK5 304-2BD00-2AA3
X306-1LD FE	6 x 10/100 Mbps RJ-45 ports electrical 1 x 100 Mbps, SC port optical, for glass FO cable (single mode), up to max. 26 km	6GK5 306-1BF00-2AA3
X307-3	7 x 10/100 Mbps RJ-45 ports electrical 3 x 1000 Mbps, SC ports optical, for glass FO cable (multi-mode), up to max. 750 m	6GK5 307-3BL00-2AA3 6GK5 307-3BL10-2AA3
X307-3LD	7 x 10/100 Mbps RJ-45 ports electrical 3 x 1000 Mbps, SC ports optical, for glass FO cable (single mode), up to max. 10 km	6GK5 307-3BM00-2AA3 6GK5 307-3BM10-2AA3
X308-2	1 x 10/100/1000 Mbps, RJ-45 ports electrical 7 x 10/100 Mbps RJ-45 ports electrical 2 x 1000 Mbps, SC ports optical, for glass FO cable (multi-mode), up to max. 750 m	6GK5 308-2FL00-2AA3 6GK5 308-2FL10-2AA3
X308-2LD	1 x 10/100/1000 Mbps, RJ-45 ports electrical 7 x 10/100 Mbps RJ-45 ports electrical 2 x 1000 Mbps, SC ports optical, for glass FO cable (single mode), up to max. 10 km	6GK5 308-2FM00-2AA3 6GK5 308-2FM10-2AA3
X308-2LH	1 x 10/100/1000 Mbps, RJ-45 ports electrical 7 x 10/100 Mbps RJ-45 ports electrical 2 x 1000 Mbps, SC ports optical, for glass FO cable (single mode), up to max. 40 km	6GK5 308-2FN00-2AA3 6GK5 308-2FN10-2AA3
X308-2LH+	1 x 10/100/1000 Mbps, RJ-45 ports electrical 7 x 10/100 Mbps RJ-45 ports electrical 2 x 1000 Mbps, SC ports optical, for glass FO cable (single mode), up to max. 70 km	6GK5 308-2FP00-2AA3 6GK5 308-2FP10-2AA3
X310	3 x 10/100/1000 Mbps, RJ-45 ports electrical 7 x 10/100 Mbps RJ-45 ports electrical	6GK5 310-0FA00-2AA3 6GK5 310-0FA10-2AA3
X310FE	10 x 10/100 Mbps RJ-45 ports electrical	6GK5 310-0BA00-2AA3 6GK5 310-0BA10-2AA3

Device	Properties	Article number
X320-1FE	20 x 10/100 Mbps RJ-45 ports electrical 1 x 100 Mbps, SC port optical, for glass FO cable (multi-mode), up to max. 5 km	6GK5 320-1BD00-2AA3
X320-3LD FE	20 x 10/100 Mbps RJ-45 ports electrical 1 x 100 Mbps SC port optical for glass FO cable (multi-mode) up to max. 5 km, 2 x 100 Mbps SC ports optical for glass FO cable (single mode) up to max. 26 km	6GK5 320-3BF00-2AA3

Structure of the type designation

The type designation of an IE Switch X-300 is made up of several parts that have the following meaning:

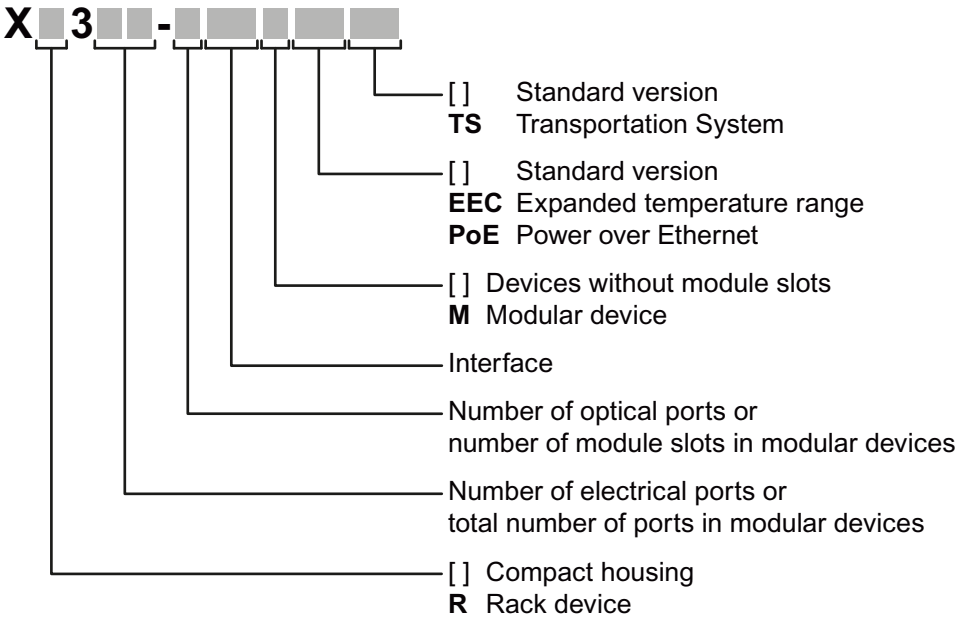

Interfaces of devices without optical ports:

Interface	Property
FE	Electrical RJ-45 port for 10/100 Mbps.
[-]	Electrical RJ-45 port for 10/100 Mbps or 10/100/1000 Mbps.

Interfaces of devices with optical ports:

Interface	Property
FE	SC port 100 Mbps multimode FO cable (up to max. 5 km).
LD FE	SC port 100 Mbps single mode FO cable (up to max. 26 km).
[-]	SC port 1000 Mbps multimode FO cable (up to max. 750 m).
LD	SC port 1000 Mbps single mode FO cable (up to max. 10 km).
LH	SC port 1000 Mbps single mode FO cable (up to max. 40 km).
LH+	SC port 1000 Mbps single mode FO cable (up to max. 70 km).

If information applies to all devices, the term "IE Switches X-300" is used. If information applies to only a particular product group, the relevant names will be used without extra information on the type or number of interfaces. Examples: "X-300" stands for non-modular devices with a compact housing, "XR-300" means all rack devices, "X-300M" means all modular devices etc.

Note

SCALANCE X320-3LD FE

The SCALANCE X320-3LD FE deviates from the type designation in that it has an SC port for multimode fiber-optic cable up to a maximum of 5 km in length and two SC ports for single mode fiber-optic cable up to a maximum of 26 km in length.

- Port 21: Multimode
- Port 22: LD (long distance, single mode)
- Port 23: LD (long distance, single mode)

2 optical interface transceivers possible

The device is also equipped with 2 optical interface transceivers.

- [1] (Fast Ethernet, long distance interface)
- [2] (Fast Ethernet, multimode interface)

Refer to "Transmitter output optical" and "Receiver input" in the technical specifications.

Unpacking and checking

WARNING

Do not use any parts that show evidence of damage

If you use damaged parts, there is no guarantee that the device will function according to the specification.

If you use damaged parts, this can lead to the following problems:

- Injury to persons
- Loss of the approvals
- Violation of the EMC regulations
- Damage to the device and other components

Use only undamaged parts.

1. Make sure that the package is complete.
2. Check all the parts for transport damage.

Scope of delivery

The following components are supplied with a SCALANCE X-300:

- Device with C-PLUG exchangeable medium (article number of the C-PLUG: 6GK1900-0AB00)
- A four-pin terminal block for the 24 V DC power supply
- A two-pin terminal block for the signaling contact
- Product CD with documentation and software

4.2 Product properties and device views

4.2.1 SCALANCE X304-2FE

Possible attachments

The SCALANCE X304-2FE provides the following options for the connection of end devices or other network segments:

- 4 RJ-45 jacks
- 2 FO ports (for multimode fiber)

Figure 4-1 X304-2FE

Column	1	2
Port number	P1	P3
		P4
	P2	P5
		P6
Connection type	Optical: Fast Ethernet	Electrical: Fast Ethernet

4.2.2 SCALANCE X306-1LD FE

Possible attachments

The SCALANCE X306-1LD FE provides the following options for the connection of end devices or other network segments:

- 6 RJ-45 jacks
- 1 FO port (for single mode fiber)

Figure 4-2 SCALANCE X306-1LD FE

Column	1	2
Port number	P1 *)	P4
		P5
	P2	P6
	P3	P7
Connection type	Electrical: Fast Ethernet *) Optical: Fast Ethernet	Electrical: Fast Ethernet

4.2.3 SCALANCE X307-3

Possible attachments

The SCALANCE X307-3 provides the following options for the connection of end devices or other network segments:

- 7 RJ-45 jacks
- 3 FO ports (for multimode fiber)

Figure 4-3 SCALANCE X307-3

Column	1	2	3	4
Port number	P1	P5	P8	P9
	P2	P6		
	P3	P7	-	P10
	P4	-		
Connection type	Electrical: Fast Ethernet		Optical: Gigabit Ethernet	

4.2.4 SCALANCE X307-3LD

Possible attachments

The SCALANCE X306-3LD provides the following options for the connection of end devices or other network segments:

- 7 RJ-45 jacks
- 3 FO ports (for single mode fiber)

Figure 4-4 SCALANCE X307-3LD

Column	1	2	3	4
Port number	P1	P5	P8	P9
	P2	P6		
	P3	P7	-	P10
	P4	-		
Connection type	Electrical: Fast Ethernet		Optical: Gigabit Ethernet	

4.2.5 SCALANCE X308-2

Possible attachments

The SCALANCE X308-2 provides the following options for the connection of end devices or other network segments:

- 8 RJ-45 jacks
- 2 FO ports (for multimode fiber)

Figure 4-5 SCALANCE X308-2

Column	1	2	3	4
Port number	P1	P5	P8	P9
	P2	P6	-	
	P3	P7	-	P10
	P4	-	-	
Connection type	Electrical: Fast Ethernet		Electrical: Gigabit Ethernet	Optical: Gigabit Ethernet

4.2.6 SCALANCE X308-2LD

Possible attachments

The SCALANCE X308-2LD provides the following options for the connection of end devices or other network segments:

- 8 RJ-45 jacks
- 2 FO ports (for single mode fiber)

Figure 4-6 SCALANCE X308-2LD

Column	1	2	3	4
Port number	P1	P5	P8	P9
	P2	P6	-	
	P3	P7	-	P10
	P4	-	-	
Connection type	Electrical: Fast Ethernet		Electrical: Gigabit Ethernet	Optical: Gigabit Ethernet

4.2.7 SCALANCE X308-2LH

Possible attachments

The SCALANCE X308-2LH provides the following options for the connection of end devices or other network segments:

- 8 RJ-45 jacks
- 2 FO ports (for single mode fiber)

Figure 4-7 SCALANCE X308-2LH

Column	1	2	3	4
Port number	P1	P5	P8	P9
	P2	P6	-	
	P3	P7	-	P10
	P4	-	-	
Connection type	Electrical: Fast Ethernet		Electrical: Gigabit Ethernet	Optical: Gigabit Ethernet

4.2.8 SCALANCE X308-2LH+

Possible attachments

The SCALANCE 308-2LH+ provides the following options for the connection of end devices or other network segments:

- 8 RJ-45 jacks
- 2 FO ports (for single mode fiber)

Figure 4-8 SCALANCE X308-2LH+

Column	1	2	3	4
Port number	P1	P5	P8	P9
	P2	P6	-	
	P3	P7	-	P10
	P4	-	-	
Connection type	Electrical: Fast Ethernet		Electrical: Gigabit Ethernet	Optical: Gigabit Ethernet

4.2.9 SCALANCE X310

Possible attachments

The SCALANCE X310 provides the following options for the connection of end devices or other network segments:

- 10 RJ-45 jacks

Figure 4-9 SCALANCE X310

Column	1	2	3	4
Port number	P1	P5	P8	P9
	P2	P6	-	P10
	P3	P7	-	-
	P4	-	-	-
Connection type	Electrical: Fast Ethernet		Electrical: Gigabit Ethernet	

4.2.10 SCALANCE X310FE

Possible attachments

The SCALANCE X310FE provides the following options for the connection of end devices or other network segments:

- 10 RJ-45 jacks

Figure 4-10 SCALANCE X310FE

Column	1	2	3	4
Port number	P1	P5	P8	P9
	P2	P6	-	P10
	P3	P7	-	-
	P4	-	-	-
Connection type	Electrical: Fast Ethernet			

4.2.11 SCALANCE X320-1FE

Possible attachments

The SCALANCE X320-1 FE provides the following options for the connection of end devices or other network segments:

- 20 RJ-45 jacks
- 1 FO port (for multimode fiber)

Figure 4-11 SCALANCE X320-1 FE

Column	1	2	3	4	5	6
Port number	P1	P5	P9	P13	P17	P21
	P2	P6	P10	P14	P18	-
	P3	P7	P11	P15	P19	-
	P4	P8	P12	P16	P12	-
Connection type	Electrical: Fast Ethernet					Optical: Fast Ether-net

4.2.12 SCALANCE X320-3LD FE

Possible attachments

The SCALANCE X320-3LD FE provides the following options for the connection of end devices or other network segments:

- 20 RJ-45 jacks
- 1 FO port (for multimode fiber)
- 2 FO ports (for single mode fiber)

Figure 4-12 SCALANCE X320-3LD FE

Column	1	2	3	4	5	6
Port number	P1	P5	P9	P13	P17	P21
	P2	P6	P10	P14	P18	P22
	P3	P7	P11	P15	P19	P23
	P4	P8	P12	P16	P20	-
Connection type	Electrical: Fast Ethernet					Optical: Fast Ethernet

4.3 SET/SELECT button

The SET/SELECT button is located on the top of the housing of devices of the X-300 EEC series. On all other devices, this button is on the front panel of the housing beside the LED display. The SET/SELECT button has several functions that are described below.

Change the display mode

By pressing the button briefly, you change to the display mode of the LED display. For more detailed information on this topic, refer to the section "LED display".

Resetting the device to the factory defaults

If you reset, all the changes you have made will be overwritten by factory defaults. Follow the steps outlined below:

1. Turn on display mode A. Display mode A is active when the "DM" LED is not lit. If this LED is lit or flashing, you will need to press the SET/SELECT briefly (possibly several times) until the "DM" LED goes off. If the SELECT/SET button is not pressed for longer than a minute, the device also turns on display mode A.
2. Hold down the SELECT/SET button for 12 seconds. If you release the button before the 12 seconds have elapsed, the reset is canceled.

Definition of the fault mask

Using the fault mask, you specify an individual "good status" for the connected ports and the power supply. Deviations from this status are then displayed as errors/faults.

1. Turn on display mode A or D. Display mode A is active when the "DM" LED is not lit. Display mode D is active when the "DM" LED flashes yellow/orange. If a different display mode is active, you will need to press the SET/SELECT briefly (possibly several times) until the required display mode is active.
2. Hold down the SET/SELECT button for five seconds. After three seconds, the "DM" LED begins to flash. If you release the button before the five seconds have elapsed, the previous fault mask will be retained.

Enable/disable the redundancy manager

1. Turn on display mode B. Display mode B is active when the "DM" LED is lit green. If a different display mode is active, you will need to press the SET/SELECT briefly (possibly several times) until display mode B is active.
2. Hold down the SET/SELECT button for five seconds. After three seconds, the "DM" LED begins to flash. If you release the button before the five seconds have elapsed, the action is aborted.
3. The result of the action depends on the initial situation:
   - If the redundancy manager and media redundancy were disabled, media redundancy is also enabled after enabling the redundancy manager.
   - If you disable the redundancy manager, media redundancy remains enabled.

4.4 LED display

The "RM" LED for the "redundancy manager" function

The "RM" LED indicates whether or not the device is operating in the role of redundancy manager and whether or not the ring is operating error-free.

LED color	LED status	Meaning
-	off	The device is not operating in the role of "redundancy manager".
green	on	The device is operating in the role of redundancy manager. The ring is working without problems, monitoring is activated.
green	flashes	The device is operating in the role of redundancy manager. An interruption has been detected on the ring and the device has switched through.

The "SB" LED for the standby function

This LED shows the status of the standby function.

LED color	LED status	Meaning
-	off	The standby function is disabled.
green	on	The standby function is enabled. The standby section is passive.
green	flashes	The standby function is enabled. The standby section is active.

The "F" LED for the fault status

The "F" LED (fault) provides information on the error/fault status of the device. While the device is starting up, this LED has the following meaning:

LED color	LED status	Meaning during the device startup
-	off	Device startup completed successfully.
red	on	Device startup not yet completed or a fault/error has occurred.
red	flashes	Bad firmware image.

During normal operation, the "F" LED provides the following information:

LED color	LED status	Meaning during operation
-	off	No operating problems.
red	on	The device has detected an error. The signaling contact opens.

The "DM" LED for the display mode

The "DM" LED (Display Mode) indicates which of the four display modes A, B, C or D is currently active. The meaning of the L1, L2 and P1, P2, ... LEDs depends on the display mode.

LED color	LED status	Meaning
-	off	Display mode **A**
green	on	Display mode **B**
orange	on	Display mode **C**
yellow/orange	flashes	Display mode **D**

Selecting the display mode

Press the SELECT/SET button to set the required display mode. If the SELECT/SET button is not pressed for longer than a minute, the device automatically changes to display mode A.

Pressing the SELECT/SET button starting at display mode A	Status of the "DM" LED	Display mode
-	off	Display mode **A** (default mode)
Press once	lit green	Display mode **B**
Press twice	lit orange	Display mode **C**
Press 3 times	flashes yellow/orange	Display mode **D**

The "L1" and "L2" or "L" LEDs for the power supply

Whereas on other devices, the "L1" and "L2" LEDs indicate information about the power, on the SCALANCE X306-1LD FE, this is done by the "L" LED. A redundant power supply for this device can be recognized by the color of the LED.

Meaning in display mode A, B or C

LED	Color	Status	Meaning
L1 / L2	_	off	Power supply L1 / L2 lower than 17 V *)
	green	on	Power supply L1 / L2 higher than 17 V *)
L	-	off	Power supplies L1 and L2 less than 17 V or not connected.
	orange	on	Power supply L1 or L2 higher than 17 V (no redundant supply).
	green	on	Power supplies L1 and L2 higher than 17 V (redundant supply).

*) for the X-300EEC the following applies:

- For devices with power supply unit 24 to 48 VDC: Limit voltage = 17 VDC
- For devices with a multiple range power supply unit 100 to 240 VAC / 60 to 250 VDC: Limit voltage = 46.5 VDC or 80 VAC

Meaning in display mode D

LED	Color	Status	Meaning
L1 / L2	_	off	Power supply L1 / L2 is not monitored. If L1 / L2 falls below 17 V *), the signaling contact does not respond.
	green	on	Power supply L1 / L2 is monitored. If L1 / L2 falls below 17 V *), the signaling contact responds.
L	-	off	Power supplies L1 and L2 are not monitored. If L1 or L2 falls below 17 V, the signaling contact does not respond.
	orange	on	Power supply L1 or L2 is monitored. If L1 or L2 falls below 17 V, the signaling contact responds.
	green	on	Power supplies L1 and L2 are monitored. If L1 and L2 fall below 17 V, the signaling contact responds.

*) for the X-300EEC the following applies:

- For devices with power supply unit 24 to 48 VDC: Limit voltage = 17 VDC
- For devices with a multiple range power supply unit 100 to 240 VAC / 60 to 250 VDC: Limit voltage = 46.5 VDC or 80 VAC

Note

Devices of the X-300EEC product group

When using only one power supply unit 24 VDC and two 24 VDC power supplies, the LEDs "L1" and "L2" signal the existence of the power supply L1 and L2.
When using two 24 VDC power supply units, the LEDs "L1" and "L2" signal the existence of the primary voltage and the secondary voltage for both power supply units. If the power supply is intact, a fault occurring on a power supply unit on the secondary side can be recognized.

The P1, P2, ... LEDs for the port status

The P1, P2, ... LEDs show information on the status of their port (transmission speed, mode, port monitoring). The meaning of these LEDs depends on the display mode ("DM" LED).

Meaning in display mode A

LED color	LED status	Meaning
-	off	No valid link to the port (for example station turned off or cable not connected).
green	on	Link exists and port in normal status. In this status, the port can receive and send data.
	flashes once per second	Link exists and port in "blocking" status. In this status, the port only sends and receives management data (no user data).
	flashes 3 times per second	Link exists and port turned off by management. In this status, no data is sent or received via the port.
	flashes 4 times per second	Port exists and is in the "monitor port" status. In this status, the data traffic of another port is mirrored to this port.
yellow	flashes / lit	Receiving data at port. With SCALANCE X-300 devices, both the receipt and the sending of data is indicated for the optical gigabit ports.

Meaning in display mode B

LED color	LED status	Meaning
-	off	Port operating at 10 Mbps.
green	on	Port operating at 100 Mbps.
orange	on	Port operating at 1000 Mbps.

If there is a problem on the connection and the type of transmission is fixed (autonegotiation off), the desired status, in other words the set transmission speed (1000 Mbps, 100 Mbps, 10 Mbps) continues to be displayed. If there is a problem on the connection and autonegotiation is active, the port LED goes off.

Meaning in display mode C

LED color	LED status	Meaning
-	off	Port operating in half duplex.
green	on	Port operating in full duplex.

Meaning in display mode D

LED color	LED status	Meaning
-	off	The port is not monitored; in other words, if a link is not established at the port, this does not trigger the signaling contact.
green	on	The port is monitored, in other words, if no connection was established at the port (for example no cable inserted), this triggers the signaling contact and an error state results.
orange	on	The port is monitored, in other words, when a valid connection exists at the port (for example non-permitted cable inserted), this triggers the signaling contact and an error state results.

4.5 C-PLUG

4.5.1 Area of application and function of the C-PLUG

Area of application

The C-PLUG (configuration plug) that ships with the product is an exchangeable memory medium for storing the configuration data of the device. The device can also be operated without a C-PLUG.

This allows fast and uncomplicated replacement of a device. The C-PLUG is taken from the previous device and inserted in the new device. The first time it is started up, the replacement device has the same configuration as the previous device except for the MAC address set by the vendor.

Principle

The data remains stored on the C-PLUG even when power is turned off. In terms of using the C-PLUG, there are two ways of operating the device:

- With unwritten C-PLUG
  If an empty C-PLUG (factory settings or deleted with the Clean function) is inserted, all the configuration data of the device is saved to it automatically when the device starts up. Changes to the configuration during operation are saved without operator intervention on the C-PLUG if this is in the "ACCEPTED" status. This depends on how you configured your SCALANCE device. In this mode, the internal memory is neither read nor written. This mode is active when a C-PLUG is inserted.
- With written C-PLUG
  A device with an accepted C-PLUG inserted uses the configuration data of the C-PLUG automatically when it starts up. Acceptance is possible only when the data was written by a compatible device type.

Response to errors

Inserting a C-PLUG that does not contain the configuration of a compatible device type, accidentally removing the C-PLUG or general malfunctions of the C-PLUG are signaled by the diagnostics mechanisms of the device (LEDs, Web-based management, SNMP, CLI and PROFINET diagnostics).

4.5.2 Removing and inserting the C-PLUG (compact housing)

NOTICE
A C-PLUG may only be removed or inserted when the device is turned off.

Position of the C-PLUG

	In devices with a compact housing, the C-PLUG is located behind the sealing screw on the rear of the device. To remove the sealing screw, use a coin or a wide blade screwdriver.

Removing the C-PLUG

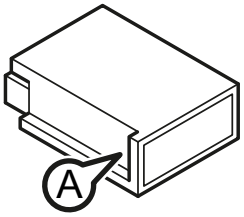	1. Turn off the power to the device. 2. Remove the sealing screw on the rear of the device with a coin or a wide blade screwdriver. 3. Insert a screwdriver between the front edge of the C-PLUG (position A) and the slot and release the C-PLUG. 4. Remove the C-PLUG and close the housing again with the sealing screw.

Inserting the C-PLUG

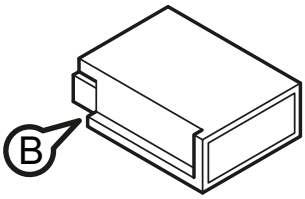	1. Turn off the power to the device. 2. Remove the sealing screw on the rear of the device with a coin or a wide blade screwdriver. 3. The housing of the C-PLUG has a protruding ridge on the long side (position B). The slot has a groove at this position. Insert the C-PLUG correctly oriented into the slot. 4. Close the housing again with the sealing screw.

Installation and disassembly

5

5.1 Safety notices for installation

Safety notices

When installing the device, keep to the safety notices listed below.

WARNING

If a device is operated in an ambient temperature of more than 50 °C, the temperature of the device housing may be higher than 70 °C. The device must therefore be installed so that it is only accessible to service personnel or users that are aware of the reason for restricted access and the required safety measures at an ambient temperature higher than 50 °C.

WARNING

If the device is installed in a cabinet, the inner temperature of the cabinet corresponds to the ambient temperature of the device.

WARNING

Cable

If the cable or conduit entry point exceeds 70 °C or the branching point of conductors exceeds 80 °C, special precautions must be taken. If the equipment is operated in an air ambient in excess of 50 °C, only use cables with admitted maximum operating temperature of at least 80 °C.

NOTICE

Improper mounting

Improper mounting may damage the device or impair its operation.

- Before mounting the device, always ensure that there is no visible damage to the device.
- Mount the device using suitable tools. Observe the information in the respective section about mounting.

Safety notices on use in hazardous areas

General safety notices relating to protection against explosion

⚠ **WARNING**
EXPLOSION HAZARD Replacing components may impair suitability for Class 1, Division 2 or Zone 2.

⚠ **WARNING**
The device is intended for indoor use only.

⚠ **WARNING**
The device may only be operated in an environment of contamination class 1 or 2 (see EN/IEC 60664-1, GB/T 16935.1).

⚠ **WARNING**
When used in hazardous environments corresponding to Class I, Division 2 or Class I, Zone 2, the device must be installed in a cabinet or a suitable enclosure.

Notes for use in hazardous locations according to ATEX, IECEx, UKEX and CCC Ex

If you use the device under ATEX, IECEx, UKEX or CCC Ex conditions you must also keep to the following safety instructions in addition to the general safety instructions for protection against explosion:

5.2 Requirements for the cabinet EN 60529 (ATEX), UKEX, IECEx and CCC-Ex

WARNING

To comply with EU Directive 2014/34 EU (ATEX 114), UK-Regulation SI 2016/1107 or the conditions of IECEx or CCC-Ex, the housing or cabinet must meet the requirements of at least IP54 (according to EN/IEC 60529, GB/T 4208) in compliance with EN IEC/IEC 60079-7, GB 3836.3.

WARNING

If the temperature of the cable or housing socket exceeds 60 °C or the temperature at the branching point of the cables exceeds 80 °C, special precautions must be taken. If the equipment is operated in an air ambient in excess of 60 °C, only use cables with admitted maximum operating temperature of at least 80 °C.

Additional notes

CAUTION

Use only approved components

If you use components and accessories that are not approved for SIMATIC NET devices or their target systems, this may violate the requirements and regulations for safety and electromagnetic compatibility.
Only use components approved for the SIMATIC NET devices.

NOTICE

Warming and premature aging of the IE switch due to direct sunlight

Direct sunlight can heat up the device and can lead to premature aging of the IE switch and its cabling.

Provide suitable shade to protect the IE switch against direct sunlight.

Note

During installation and operation, keep to the installation guidelines and safety notices described in this document and in the system manuals "Industrial Ethernet / PROFINET Industrial Ethernet" and "Industrial Ethernet / PROFINET passive network components".

You will find information on the system manuals in the section "Introduction", under "Further documentation".

Note

When installing and operating the device, keep to the installation instructions and safety-related notices as described in this document and in the manual "SIMATIC NET Industrial Ethernet Twisted Pair and Fiber Optic Networks (https://support.industry.siemens.com/cs/ww/en/view/1172207)".

5.3 Installation on a DIN rail

WARNING

When used in shipbuilding, installation on a 35mm DIN rail is not permitted.

The 35 mm DIN rail (DIN EN 60715) does not provide adequate support in shipping or when there is severe vibration (> 10 g). Under such conditions, the device can come out of the mounting and may cause injury.

In such situations, install the device on an S7-300 standard rail.

Valid only for the appropriately marked devices in the various product groups. This is indicated by a note in the Installation options table. Refer to the relevant table in the section Technical specification (subsection, construction, installation and environment).

Installation

Install the IE Switch X-300 on a 35 mm DIN rail complying with DIN EN 60715.

1. Hang the IE Switch X-300 on the DIN rail and then push it in against the rail until it clips into place.
2. Fit the connectors for the power supply.
3. Fit the connectors for the signaling contact.
4. Insert the terminal blocks into the sockets on the IE Switch X-300.

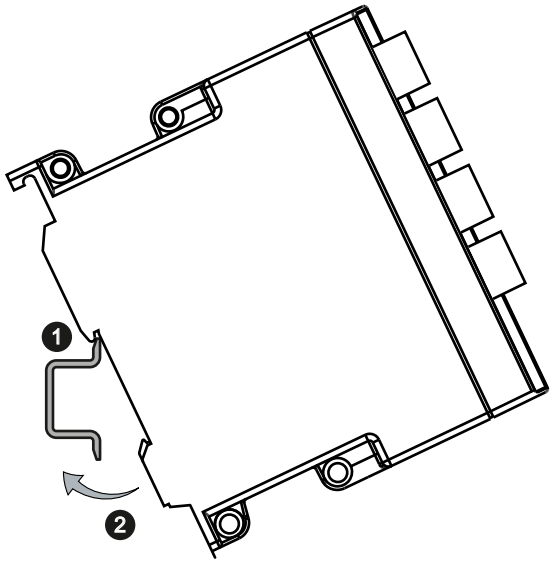

Figure 5-1 Mounting an IE Switch X-300 on a DIN rail (35 mm)

Removing

To remove an IE Switch X-300 from the DIN rail:

1. Disconnect all cables from the switch.
2. Release the lower part of the IE Switch X-300 from the DIN rail with a screwdriver and pull the lower part of the switch away from the DIN rail.

Figure 5-2 Removing an IE Switch X-300 from a DIN rail (35 mm)

Removing an IE Switch X-300

1. Push the X-300 down.
2. Swing the device upwards.

No tools are necessary for removing the device.

5.4 Installation on a standard rail

Installation on a SIMATIC S7-300 standard rail

1. Place the upper guide at the top of the IE Switch X-300 housing in the S7 standard rail.
2. Screw the IE Switch X-300 to the underside of the standard rail.
3. Fit the connectors for the power supply.
4. Fit the connectors for the signaling contact.
5. Insert the terminal blocks into the sockets on the IE Switch X-300.

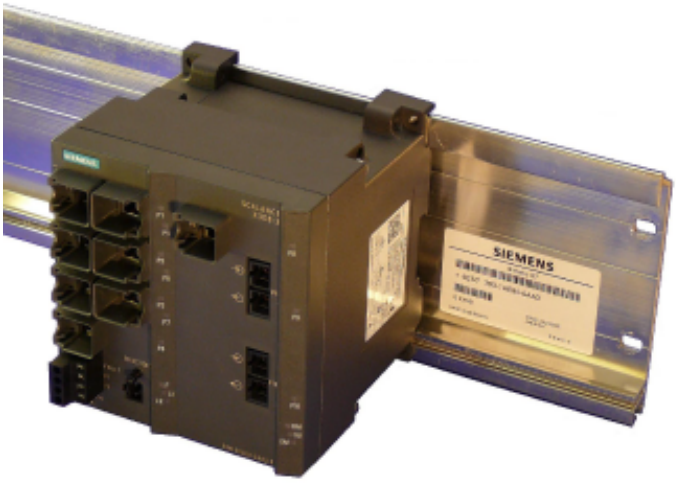

Figure 5-3 IE Switch X-300 installation on a SIMATIC S7-300 standard rail

Uninstalling

To remove an IE Switch X-300 from the SIMATIC S7-300 standard rail:

1. First disconnect all connected cables.
2. Loosen the screws on the underside of the S7 standard rail and lift the IE Switch X-300 away from the rail.

5.5 Wall mounting

Wall mounting

1. For wall mounting, use suitable mounting fittings for the wall
(for example, for a concrete wall, four plugs 6 mm diameter and 30 mm long, 4 screws 3.5 mm diameter and 40 mm long).
2. Connect the electrical cable connecting cables.
3. Fit the connectors for the signaling contact.
4. Insert the terminal blocks into the sockets on the IE Switch X-300.

Note

For more exact dimensions, please refer to the section "Dimension drawings".

Note

The wall mounting must be capable of supporting at least four times the weight of the IE Switch X-300.

Note

For wall mounting of a rack device (R), use suitable fittings and mount the device as shown in the drawing.

Connecting 6

6.1 Safety when connecting up

Safety notices

When connecting up the device, keep to the safety notices listed below.

WARNING

Power supply

The device is designed for operation with a directly connectable safety extra low voltage (SELV) from a limited power source (LPS).

The power supply therefore needs to meet at least one of the following conditions:

- Only safety extra low voltage (SELV) with limited power source (LPS) complying with IEC 60950-1 / EN 60950-1 / VDE 0805-1 or IEC 62368-1 / EN 62368-1 / VDE 62368-1 may be connected to the power supply terminals.
- The power supply unit for the device must meet NEC Class 2 according to the National Electrical Code (r) (ANSI / NFPA 70).

If the equipment is connected to a redundant power supply (two separate power supplies), both must meet these requirements.

Note

A power source that supplies safety extra low voltage combined with a following NEC Class 2 power limiter also meets the requirements according to IEC 60950-1 / EN 60950-1 / VDE 0805-1 or NEC Class 2. A suitable power limiter is for example the redundancy module SITOP PSE202U NEC Class 2 (article number 6EP1962-2BA00).

Note

Safety extra-low voltage

The supply of the devices by PELV (Protective Extra Low Voltage) according to DIN VDE 0100-410 or IEC 60364-4-41 is permitted when the generated nominal voltage does not exceed the voltage limits 25 VAC or 60 VDC.

NOTICE
Failure of the data traffic due to contamination of optical plug-in connections Optical sockets and plugs are sensitive to contamination of the end face. Contamination can lead to the failure of the optical transmission network. Take the following precautions to avoid functional impairments: • Clean the end face of field-assembled connectors carefully before connecting. No residues of processing may remain on the connector. • Only remove the dust caps of optical transceivers and pre-configured cables shortly before connecting the cables. • Close unused optical sockets and plugs as well as pluggable transceivers and slots with the supplied protective caps.

Safety notices on use in hazardous areas

General safety notices relating to protection against explosion

⚠ WARNING
EXPLOSION HAZARD Do not connect or disconnect cables to or from the device when a flammable or combustible atmosphere is present.

6.2 Risk of explosion when pressing the button (ATEX, IECEx)

WARNING

EXPLOSION HAZARD

Do not press the SELECT/SET button when there is an explosive atmosphere.

WARNING

Suitable cables at high ambient temperatures in hazardous area

At an ambient temperature of ≥ 60 °C, use heat-resistant cables designed for an ambient temperature at least 20 °C higher. The cable entries used on the enclosure must comply with the IP degree of protection required by EN IEC / IEC 60079-0, GB 3836.1.

WARNING

Unsuitable cables or connectors

Risk of explosion in hazardous areas

- Only use connectors that meet the requirements of the relevant type of protection.
- If necessary, tighten the connector screw connections, device fastening screws, grounding screws, etc. according to the specified torques.
- Close unused cable openings for electrical connections.
- Check the cables for a tight fit after installation.

WARNING

Lack of equipotential bonding

If there is no equipotential bonding in hazardous areas, there is a risk of explosion due to equalizing current or ignition sparks.

- Ensure that equipotential bonding is available for the device.

WARNING

Unprotected cable ends

There is a risk of explosion due to unprotected cable ends in hazardous areas.

- Protect unused cable ends according to IEC/EN 60079-14.

WARNING

Improper installation of shielded cables

There is a risk of explosion due to equalizing currents between the hazardous area and the non-hazardous area.

- Ground shielded cables that cross hazardous areas at one end only.
- Lay a potential equalization conductor when grounding at both ends.

WARNING

Insufficient isolation of intrinsically safe and non-intrinsically safe circuits

Risk of explosion in hazardous areas

- When connecting intrinsically safe and non-intrinsically safe circuits, ensure that the galvanic isolation is performed properly in compliance with local regulations (e.g. IEC 60079-14).
- Observe the device approvals applicable for your country.

Notes for use in hazardous locations according to ATEX, IECEx, UKEX and CCC Ex

If you use the device under ATEX, IECEx, UKEX or CCC Ex conditions you must also keep to the following safety instructions in addition to the general safety instructions for protection against explosion:

WARNING

Transient overvoltages

Take measures to prevent transient overvoltages of more than 40% of the rated voltage (or more than 119 V). This is the case if you only operate devices with SELV (safety extra-low voltage).

Safety notices when using the device according to Hazardous Locations (HazLoc)

If you use the device under HazLoc conditions you must also keep to the following safety notices in addition to the general safety notices for protection against explosion:

WARNING

EXPLOSION HAZARD

You may only connect or disconnect cables carrying electricity when the power supply is switched off or when the device is in an area without inflammable gas concentrations.

Note

Commissioning devices with redundancy mechanisms

If you use redundancy mechanisms ("HRP" media redundancy or "MRP" and/or redundant coupling of rings over standby coupling), open the redundant path before you insert a new or replacement device in an operational network. A bad configuration or attachment of the Ethernet cables to incorrectly configured ports causes overload in the network and a breakdown in communication.

A device may only be inserted in a network and connected in the following situations:

- HRP/MRP:
  The ring ports of the device being inserted in the ring were configured as ring ports. The required redundancy mode must also be enabled (see "Configuration Manual SCALANCE X-300 / X-400", section "X-300 Ring Configuration"). If the device is intended to operate as the redundancy manager, "Redundancy manager enabled" must also be set.
- Standby coupling:
  "Standby connection" must be "enabled" and the "Standby connection name" must match the name of the partner device. You will also need to configure the port with "Enable Standby Port Monitoring" (see "Configuration Manual SCALANCE X-300 / X-400", section "X-300/ X-400 Standby Mask").

6.3 Wiring rules

When wiring use cables with the following AWG categories or cross sections.

Wiring rules for ...		Screw/spring-loaded terminals
connectable cable cross sections for flexible cables ...	without wire end ferrule	0.25 - 2.5 mm^2
		AWG: 24 - 13
	with wire end ferrule with plastic ferrule**	0.25 - 2.5 mm^2
		AWG: 24 - 13
	with wire end ferrule without plastic ferrule**	0.25 - 2.5 mm^2
		AWG: 24 - 13
	with TWIN wire end ferrule**	0.5 - 1 mm^2
		AWG: 20 - 17
Stripped length of the cable		8 - 10 mm
Wire end ferrule according to DIN 46228 with plastic ferrule**		8 - 10 mm

* AWG: American Wire Gauge

** See note "Wire end ferrules"

Note

Wire end ferrules

Use crimp shapes with smooth surfaces, such as provided by square and trapeze shaped crimp cross sections.

Crimp shapes with wave-shaped profile are unsuitable.

6.4 Connecting the switch

Procedure for connecting the device

Follow the steps below to connect the device:

1. Turn off the power supply.
2. Connect the grounding of the switch according to the following description.
3. Connect the signaling contact of the switch according to the following description.
4. Connect the power supply of the switch according to the following description.
5. Connect the network nodes / subnets to the switch.
6. Turn on the power supply for the switch.

6.5 Connecting functional ground

Installation on a DIN rail

The device is grounded over the DIN rail.

S7 standard rail

The device is grounded over its rear panel and the neck of the screw.

Wall mounting

The device is grounded by the securing screw in the unpainted hole.

Please note that IE Switches X-300 must be grounded over one securing screw with minimum resistance.

If an IE Switch X-300 is mounted on a non-conducting base, a grounding cable must be installed. The grounding cable is not supplied with the device. Connect the paint-free surface of the IE Switch X-300 to the nearest grounding point using the grounding cable.

19" rack mounting

- 24 VDC variant:
  Grounding is via the mounting bracket on the device or alternatively/additionally via the bolts on the rear of the device.
- 100 to 240 VAC variant:
  Grounding is via the mounting bracket on the device or alternatively/additionally via the bolts on the rear of the device.

6.6 24 VDC signaling contact

Connecting the signaling contact

The signaling contact is connected to a 2-pin plug-in terminal block.

The signaling contact can be subjected to a maximum load of 100 mA (safety extra low voltage SELV 12 VDC / 24 VDC).

Table 6-1 Pin assignment of the signaling contact

Pin number	Assignment (example)
	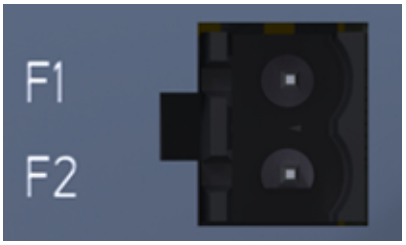
Pin 1	F1
Pin 2	F2

6.7 Power supply

Table 6-2 24 to 48 VDC safety extra-low voltage overview

Device	Device version (power supply)	24 V safety extra-low voltage (SELV) can be connected redundantly
X304-2FE	1 x 24 VDC	●
X306-1LD FE	1 x 24 VDC	●
X307-3	1 x 24 VDC	●
X307-3LD	1 x 24 VDC	●
X308-2	1 x 24 VDC	●
X308-2LD	1 x 24 VDC	●
X308-2LH	1 x 24 VDC	●
X308-2LH+	1 x 24 VDC	●
X310	1 x 24 VDC	●
X310FE	1 x 24 VDC	●
X320-1 FE	1 x 24 VDC	●
X320-3LD FE	1 x 24 VDC	●

WARNING

Operation only with safety extra-low voltage

- The IE Switch X-300 is designed for operation with safety extra-low voltage (SELV). This means that only safety extra-low voltages (SELV) complying with IEC950/EN60950/VDE0805 can be connected to the power supply terminals.
- The power supply unit for the IE Switch X-300 power supply must meet NEC Class 2, as described by the National Electrical Code(r) (ANSI/NFPA 70).
- The power of all connected power supply units must total the equivalent of a power source with limited power (LPS limited power source).
- If the device is connected to a redundant power supply (two separate power supplies), both must meet these requirements.
- The signaling contact can be subjected to a maximum load of 100 mA (safety extra-low voltage (SELV), 24 V DC).
- Never operate the device with AC voltage or DC voltage higher than 32 V DC.

NOTICE
Damage to the device due to overvoltage If IE Switches X-300 are supplied over long 24 V power supply lines or networks, measures are necessary to prevent interference by strong electromagnetic pulses on the supply lines. These can result, for example, due to lightning or switching of large inductive loads. One of the tests used to attest the immunity of devices of the IE Switches X-300 to electromagnetic interference was the "surge immunity test" according to EN61000-4-5. This test requires overvoltage protection for the power supply lines. A suitable device is, for example, the Dehn Blitzductor BVT AVD 24 V type no. 918 422 or a comparable protective element. Manufacturer: DEHN+SÖHNE GmbH+Co.KG, Postfach 1640, D-92306 Neumarkt, Germany.

Connecting 24 V safety extra-low voltage (SELV)

- The power supply is connected using a 4-pin plug-in terminal block.
- The power supply can be connected redundantly. Both inputs are isolated. There is no distribution of load. When a redundant power supply is used, the power supply unit with the higher output voltage supplies the IE Switch X-300 alone.
- The power supply is connected over a high resistance with the enclosure to allow an ungrounded set up. The two power inputs are non-floating.

Table 6-3 Pin assignment for the power supply

Pin number	Assignment (terminal block)
	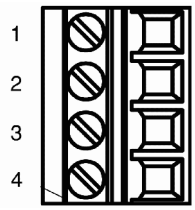
Pin 1	L1+ (24 VDC)
Pin 2	M1
Pin 3	M2
Pin 4	L2+ (24 VDC)

Maintenance and cleaning

7

WARNING

Unauthorized repair of devices in explosion-proof design

Risk of explosion in hazardous areas

- Repair work may only be performed by personnel authorized by Siemens.

WARNING

Impermissible accessories and spare parts

Risk of explosion in hazardous areas

- Only use original accessories and original spare parts.
- Observe all relevant installation and safety instructions described in the manuals for the device or supplied with the accessories or spare parts.

CAUTION

Hot surfaces

Risk of burns during maintenance work on parts with a surface temperature above 70 °C (158 °F).

- Take appropriate protective measures, for example, wear protective gloves.
- Once maintenance work is complete, restore the touch protection measures.

NOTICE

Cleaning the housing

If the device is not in a hazardous area, only clean the outer parts of the housing with a dry cloth.

If the device is in a hazardous area, use a slightly damp cloth for cleaning.

Do not use solvents.

Technical data

8

Note

Validity of the technical specifications

All the technical specifications described in this section that is not assigned to a specific device variant, version or a media module, apply to all device variants/versions of the product group.

8.1 Construction, installation and environmental conditions

Table 8-1 Construction

Device variant	Dimensions (W x H x D)	Weight	Degree of protection
X304-2FE, X306-1LD FE	60 × 125 × 123 mm	700 g	IP30
X307-3, X307-3LD, X308-2, X308-2LD, X308-2LH, X308-2LH+, X310, X310FE,	120 × 125 × 123 mm	1400 g	IP30
X320-1FE, X320-3LD FE	180 × 125 × 123 mm	1650 g	IP30

Table 8-2 Installation options

Device variant	Installation options
X304-2FE, X306-1LD FE	• DIN rail • S7-300 standard rail • Wall
X307-3, X307-3LD, X308-2, X308-2LD, X308-2LH, X308-2LH+, X310, X310FE, X320-1FE, X320-3LD FE	• DIN rail [1)] • S7-300 standard rail • Wall

[1)] Note: When used in shipbuilding, installation on a 35 mm DIN rail is not permitted. In ships, the 35 mm DIN rail does not provide adequate support.

Table 8-3 Permitted ambient conditions

Device variant	Storage/transport temperature	Operating temperature	Max. relative humidity in operation at 25 °C	Max. ambient temperature at operating altitude
X304-2FE, X306-1LD FE, X320-1FE, X320-3LD FE	-40 °C to +70 °C	As of hardware product version 1: -40 °C to +60 °C	<= 95% (no condensation)	Max. 55 °C as of 2000 m Max. 50 °C as of 3000 m
X307-3, X308-2	-40 °C to +70 °C	For hardware product version 1: 0 °C to +60 °C As of hardware product version 2: -10 °C to +60 °C	<= 95% (no condensation)	Max. 55 °C as of 2000 m Max. 50 °C as of 3000 m
X307-3LD, X308-2LD, X308-2LH, X308-2LH+, X310, X310FE	-40 °C to +70 °C	For hardware product version 1: 0 °C to +60 °C As of hardware product version 2: -40 °C to +60 °C	<= 95% (no condensation)	Max. 55 °C as of 2000 m Max. 50 °C as of 3000 m

8.2 Connectors and electrical data

Table 8-4 Connection for end devices or network components

Device variant	Electrical over twisted pair	Optical over fiber-optic cable
X304-2FE	4 x RJ-45 jacks with MDI-X assignment 10/100 Mbps (half / full duplex)	2 x SC duplex socket (MM) (100 Mbps, full duplex to 100BaseFX)
X306-1LD FE	6 x RJ-45 jacks with MDI-X assignment 10/100 Mbps (half / full duplex)	1 x SC duplex socket (SM) (100 Mbps, full duplex to 100BaseFX)
X307-3	7 x RJ-45 jacks with MDI-X assignment 10/100 Mbps (half / full duplex)	3 x SC duplex sockets (1000 Mbps, full duplex to 1000BaseSX)
X307-3LD	7 x RJ-45 jacks with MDI-X assignment 10/100 Mbps (half / full duplex)	3 x SC duplex sockets (1000 Mbps, full duplex to 1000BaseLX)
X308-2	7 x RJ-45 jacks with MDI-X assignment 10/100 Mbps (half / full duplex) 1 x RJ-45 socket with MDI-X pinning 10/100/1000 Mbps (half/ full duplex)	2 x SC duplex sockets (1000 Mbps, full duplex to 1000BaseSX)
X308-2LD	7 x RJ-45 jacks with MDI-X assignment 10/100 Mbps (half / full duplex) 1 x RJ-45 jacks with MDI-X assignment 10/100/1000 Mbps (half / full duplex)	2 x SC duplex sockets (1000 Mbps, full duplex to 1000BaseLX)
X308-2LH	7 x RJ-45 jacks with MDI-X assignment 10/100 Mbps (half / full duplex) 1 x RJ-45 socket with MDI-X pinning 10/100/1000 Mbps (half/ full duplex)	2 x SC duplex sockets (1000 Mbps, full duplex to 1000BaseLX)
X308-2LH+	7 x RJ-45 jacks with MDI-X assignment 10/100 Mbps (half / full duplex) 1 x RJ-45 jacks with MDI-X assignment 10/100/1000 Mbps (half / full duplex)	2 x SC duplex sockets (1000 Mbps, full duplex to 1000BaseLX)
X310	7 x RJ-45 jacks with MDI-X assignment 10/100 Mbps (half / full duplex) 3 x RJ-45 jacks with MDI-X assignment 10/100/1000 Mbps (half / full duplex)	-
X310FE	10 x RJ-45 jacks with MDI-X assignment 10/100 Mbps (half / full duplex)	-
X320-1 FE	20 x RJ-45 jacks with MDI-X assignment 10/100 Mbps (half / full duplex)	1 x SC duplex socket (MM) (100 Mbps, full duplex to 100BaseFX)
X320-3LD FE	20 x RJ-45 jacks with MDI-X assignment 10/100 Mbps (half / full duplex)	1 x SC duplex socket (MM) 2 x SC duplex sockets (SM) (100 Mbps, full duplex to 100BaseFX)

Table 8-5 Electrical data: Power supply

Rated voltage Safety extra-low voltage (SELV)	Voltage range	Permitted voltage range including total ripple
24 VDC	19.2 VDC - 28.8 VDC	18 VDC - 32 VDC

Table 8-6 Electrical data: Power consumption

Device variant	Power loss at 24 VDC	Current consumption at rated voltage 24 VDC	Overcurrent protection at input (non-replaceable fuse)
X304-2FE	6.2 W	260 mA	3 A / 32 V
X306-1LD FE	4.8 W	200 mA	3 A / 32 V
X307-3, X307-3LD, X308-2, X308-2LD, X308-2LH, X308-2LH+, X310, X310FE, X320-1 FE	9.6 W	400 mA	3 A / 32 V
X320-3LD FE	12 W	500 mA	3 A / 32 V

Table 8-7 Electrical data: Signaling contact

Voltage via signaling contact	24 VDC
Switching capacity (resistive load)	max. 100 mA
Resistor between F1-F2	< 8 Ω

Table 8-8 Plug-in terminal block for connectors of the power supply and signaling contact

Power supply	1 x 4-pin
Signaling contact	1 x 2-pin

Table 8-9 Electrical data: Transmitter output (optical) and receiver input

Device variant	Transmitter output (optical)		Receiver input	
	min. [dBm]	max. [dBm]	Sensitivity min. [dBm]	Input power max. [dBm]
X304-2FE	-19	-14	-32	-3
X306-1LD FE	-15	-8	-34	-3

Device variant	Transmitter output (optical)		Receiver input	
	min. [dBm]	max. [dBm]	Sensitivity min. [dBm]	Input power max. [dBm]
X307-3	-9.5	-4	-17	-3
X307-3LD	-9.5	-3	-21	-3
X308-2	-9.5	-4	-17	-3
X308-2LD	-9.5	-3	-21	-3
X308-2LH	-6	0	-23	-3
X308-2LH+	0	5	-23	-3
X310	-	-	-	-
X310FE	-	-	-	-
X320-1 FE	-19	-14	-32	-3
X320-3LD FE	-15[1)]	-8[1)]	-34[1)]	-3[1)]
	-19[2)]	-14[2)]	-32[2)]	-3[2)]

[1)] Fast Ethernet, long distance interface

[2)] Fast Ethernet, multimode interface

Note

Exception in the naming of X320-3LD FE

With the X320-3LD FE IE switch, the key to the name is different. The position -3LD covers a total of 3 connectors (1-2) of which only 2 connectors are LD, refer to the explanation below:

- Port 21: Multimode
- Port 22: LD (long distance, single mode)
- Port 23: LD (long distance, single mode)

Note

2 optical interface transceivers possible (X320-3LD FE)

The device is also equipped with 2 optical interface transceivers.

- [1)] Fast Ethernet, long distance interface
- [2)] Fast Ethernet, multimode interface

As a result, the electrical data in the technical specifications is divided into two parts: transmitter output optical and receiver input.

8.3 Cable lengths

Table 8-10 Permitted cable lengths (copper cable - Fast Ethernet)

Cable type	Accessory (plug, outlet, TP cord)	Permitted cable length
IE TP torsion cable	with IE FC Outlet RJ-45 + 10 m TP cord	0 to 45 m + 10 m TP cord
	with IE FC RJ-45 Plug 180	0 to 55 m
IE FC TP Marine Cable IE FC TP Trailing Cable IE FC TP Flexible Cable	with IE FC Outlet RJ-45 + 10 m TP cord	0 to 75 m + 10 m TP cord
	with IE FC RJ-45 Plug 180	0 to 85 m
IE FC TP standard cable	with IE FC Outlet RJ-45 + 10 m TP cord	0 to 90 m + 10 m TP cord
	with IE FC RJ-45 Plug 180	0 to 100 m

Table 8-11 Permitted cable lengths (copper cable - gigabit Ethernet)

Cable type	Accessory (plug, outlet, TP cord)	Permitted cable length
IE FC standard cable, 4×2, 24 AWG IE FC flexible cable, 4×2, 24 AWG	with IE FC RJ-45 Plug 180, 4x2	0 to 90 m
IE FC standard cable, 4×2, 22 AWG	with IE FC Outlet RJ-45 + 10 m TP cord	0 to 60 m + 10 m TP cord
IE FC flexible cable, 4×2, 22 AWG	with IE FC Outlet RJ-45 + 10 m TP cord	0 to 90 m + 10 m TP cord

Table 8-12 Permitted cable lengths (fiber-optic cable - Fast Ethernet)

Device variant	Fiber-optic cable type	Permitted cable length	Attenuation
X304-2FE, X320-1 FE	50/125 µm multimode fiber	0 to 5 km	≤1 dB/km at 1300 nm; 1200 MHz×km; maximum insertion loss 0.5 dB; 9 dB max. permitted FO cable attenuation at 3 dB link power margin
	62.5/125 µm multimode fiber	0 to 5 km	≤1 dB/km at 1300 nm; 1200 MHz×km; maximum insertion loss 0.5 dB; 9 dB max. permitted FO cable attenuation at 3 dB link power margin
X306-1LD FE	9/125 µm single mode fiber	0 to 26 km	≤0.5 dB/km at 1310 nm; maximum insertion loss 0.5 dB; 14 dB max. permitted FO cable attenuation at 2 dB link power margin
X310FE	-	-	-

Device variant	Fiber-optic cable type	Permitted cable length	Attenuation
X320-3LD FE	50/125 µm multimode fiber	0 to 5 km	≤1 dB/km at 1300 nm; 1200 MHz×km; maximum insertion loss 0.5 dB; 9 dB max. permitted FO cable attenuation at 3 dB link power margin
	9/125 µm single mode fiber	0 to 26 km	≤0.5 dB/km at 1310 nm; maximum insertion loss 0.5 dB; 14 dB max. permitted FO cable attenuation at 2 dB link power margin

Table 8-13 Permitted cable lengths (fiber-optic cable - gigabit)

Device variant	Fiber-optic cable type	Permitted cable length	Attenuation
X307-3, X308-2	62.5/125 µm multimode fiber	0 to 350 m	≤3.1 dB/km at 850 nm; 1200 MHz×km; maximum insertion loss 0.5 dB; 4.5 dB max. permitted FO cable attenuation at 3 dB link power margin
	50/125 µm multimode fiber	0 to 750 m	≤2.5 dB/km at 850 nm; 1200 MHz×km; maximum insertion loss 0.5 dB; 4.5 dB max. permitted FO cable attenuation at 3 dB link power margin
X307-3LD X308-2LD	9/125 µm single mode fiber	0 to 10 km	≤0.5 dB/km at 1310 nm; maximum insertion loss 0.5 dB; 6 dB max. permitted FO cable attenuation at 3 dB link power margin
X308-2LH	9/125 µm single mode fiber	to 40 km	≤0.4 dB/km at 1550 nm; maximum insertion loss 0.5 dB; 18 dB max. permitted FO cable attenuation at 2 dB link power margin; minimum cable attenuation 3 dB
X308-2LH+	9/125 µm single mode fiber	to 70 km	≤0.28 dB/km at 1550 nm; maximum insertion loss 0.5 dB; 21 dB max. permitted FO cable attenuation at 2 dB link power margin; minimum cable attenuation 8 dB
X310	-	-	-

8.4 Other properties

Switching properties

Max. number of learnable addresses	8000
Aging time	30 sec
Switching technique	Store and forward
Latency	5 µs

Reconfiguration times for redundancy mechanisms

Redundancy mechanism	Reconfiguration times
HRP	300 ms
Standby link	300 ms
MRP	200 ms

Mean time between failure (MTBF)

Device variant	MTBF [1]
X304-2FE	55 years
X306-1LD FE	65 years
X307-3	40 years
X308-2	42 years
X307-3LD , X308-2LD, X308-2LH, X308-2LH+,	38 years
X310, X310FE	45 years
X320-1 FE	35 years
X320-3LD FE	30 years

[1] These values apply at 40 °C.

Note

The IE Switches X-300 support "full wire speed switching" complying with IEEE 802.3 on all ports. The number of packets therefore depends on the packet length.

Full wire speed switching

Number of frames per second		At a frame length of
At 100 Mbps	At 1000 Mbps	
148810	1488095	64 bytes
84459	844595	128 bytes
45290	452899	256 bytes
23496	234962	512 bytes
11973	119732	1024 bytes

Number of frames per second		At a frame length of
At 100 Mbps	At 1000 Mbps	
9615	96154	1280 bytes
8127	81274	1518 bytes

Note

The following applies to IE Switches X-300:

The number of IE Switches X-300 connected in a line influences the frame delay time. When a frame passes through the switch, this is delayed by the Store&Forward function of the IE Switch X-300 by the following values:

- at 64 bytes frame length: Delay of approx. 10 microseconds (at 100 Mbps)
- at 1500 bytes frame length: Delay of approx. 130 microseconds (at 100 Mbps)

This means, the more IE Switches X-300 a frame runs through, the higher the frame delay.

PRP compatibility

Device variant	As of version *
X304-2FE	V3.7.0
X306-1LD FE	
X307-3	
X307-3LD	
X308-2	
X308-2LD	
X308-2LH	
X308-2LH+	
X310	
X310FE	
X320-1 FE	
X320-3LD FE	

* Information about the firmware version (V) as of which PRP is supported.

Note

For a device to be used in PRP networks, it must be able to process a frame length of at least 1528 bytes (Jumbo Frames). This value is the maximum frame length including VLAN tag of 1522 bytes plus the length of the PRP trailer of 6 bytes. The following table shows the version as of which the devices are PRP-compatible.

Dimension drawings

9

Note

The IE Switches X-300 are available in small, medium and large variants.
The dimension drawings are shown below.

Small design

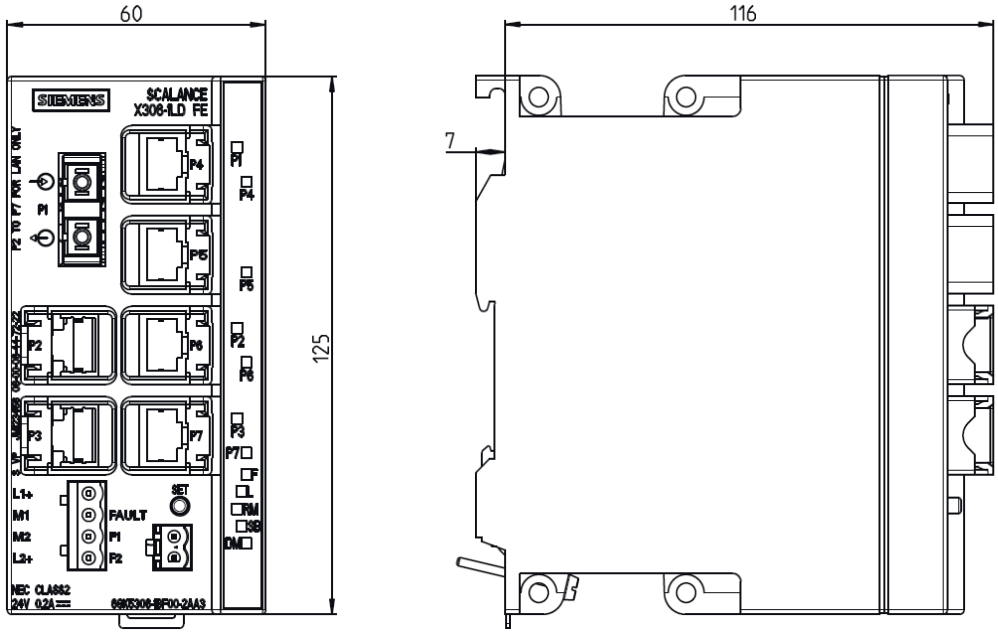

Figure 9-1 Small design dimension drawing (example used here SCALANCE X306-1LD FE)

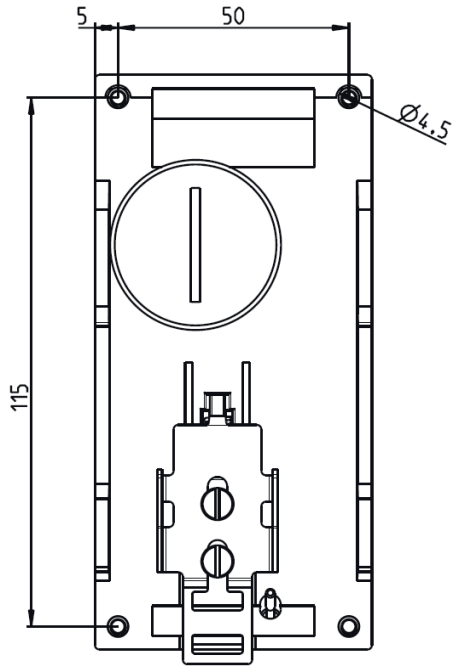

Figure 9-2 Small design dimension drawing (IE Switch X-306)

Medium design

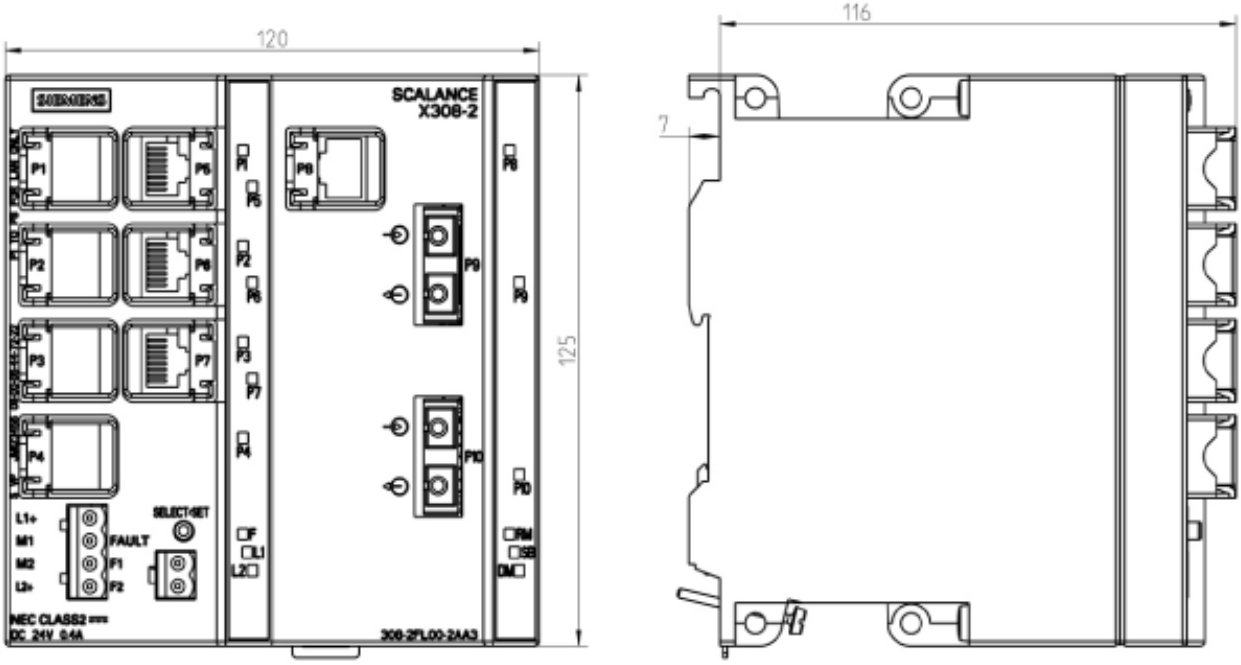

Figure 9-3 Medium design dimension drawing (example used here SCALANCE X308-2)

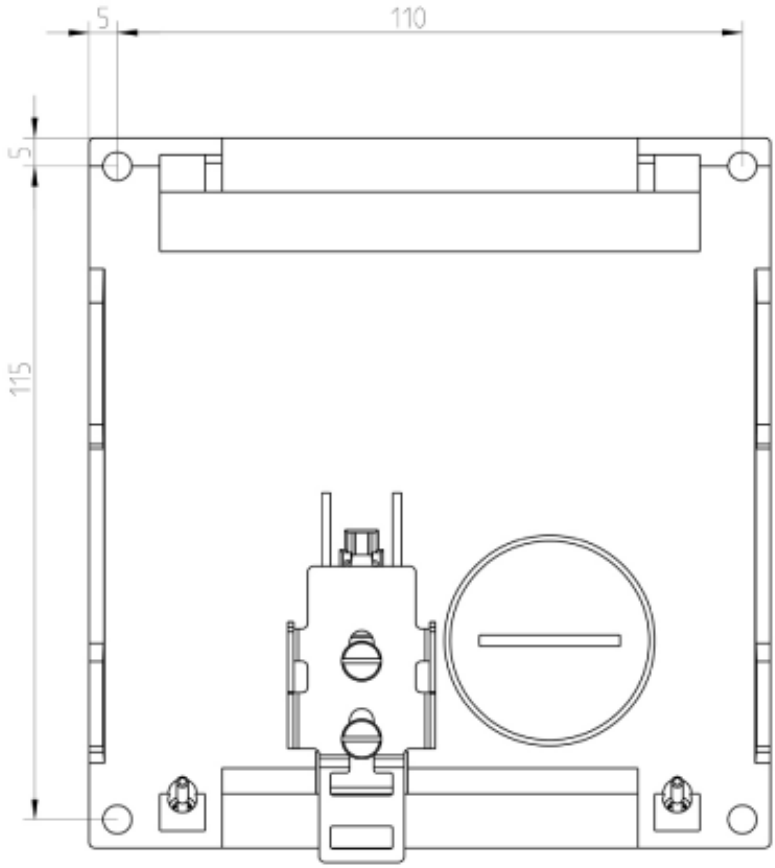

Figure 9-4 Medium design dimension drawing (IE Switch X-300)

Large design

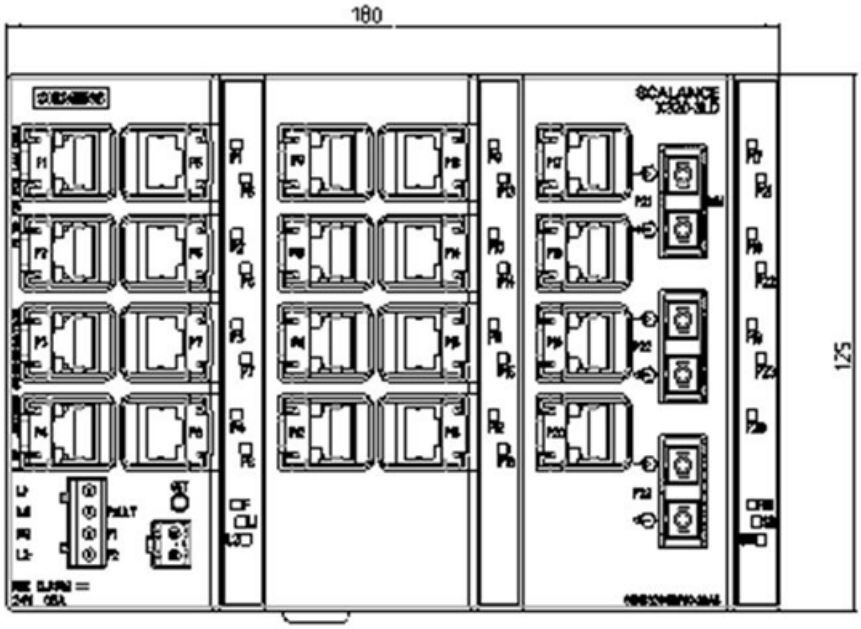

Figure 9-5 Large design dimension drawing Part 1 (example used here SCALANCE X320-3LD FE)

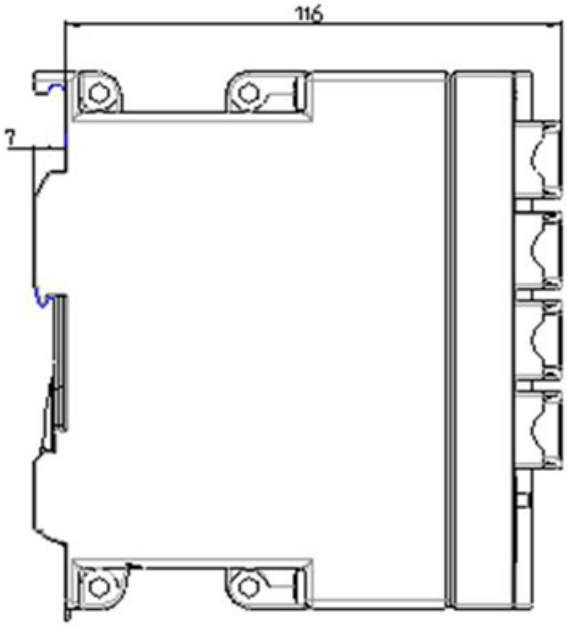

Figure 9-6 Large design dimension drawing Part 2 (example used here SCALANCE X320-3LD FE)

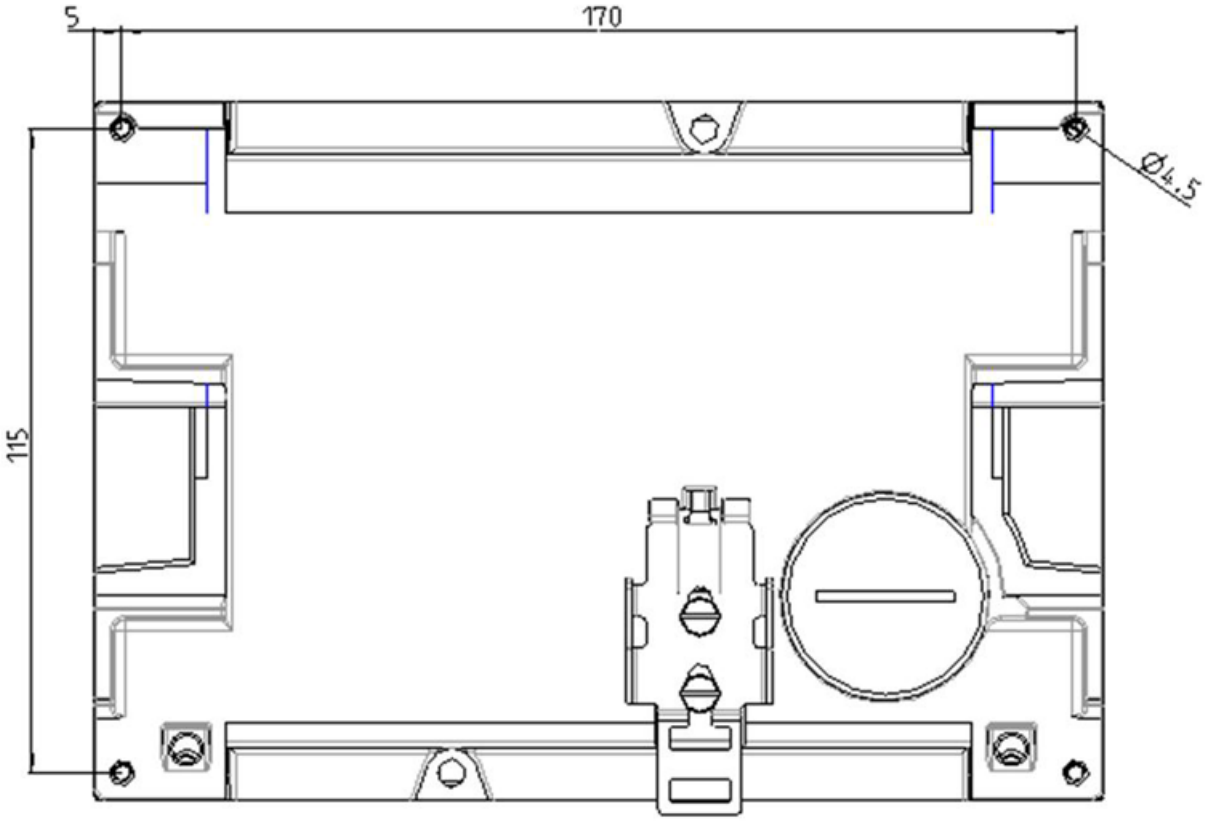

Figure 9-7 Large design dimension drawing (IE Switch X-320)

Certifications and approvals 10

The SIMATIC NET products described in these Operating Instructions have the approvals listed below.

Note

Issued approvals on the type plate of the device

The specified approvals apply only when the corresponding mark is printed on the product. You can check which of the following approvals have been granted for your product by the markings on the type plate.

Current approvals on the Internet

You will find the current approvals for the product on the Internet pages of Siemens Industry Online Support (https://support.industry.siemens.com/cs/ww/en/ps/15296/cert).

Notes for the manufacturers of machines

This product is not a machine in the sense of the EC Machinery Directive or the Supply of Machinery (Safety) Regulations (UK).

There is therefore no declaration of conformity relating to the EC Machinery Directive 2006/42/EEC or the Supply of Machinery (Safety) Regulations 2008 (UK) for this product.

If the product is part of the equipment of a machine, it must be included in the procedure for obtaining the EU/UK conformity assessment by the manufacturer of the machine.

Machinery directive

The product is a component in compliance with the EC Machinery Directive 2006/42/EEC and the Supply of Machinery (Safety) Regulations 2008 (UK).

According to the Machinery Directive respectively the Supply of Machinery (Safety) Regulations (UK), we are obliged to point out that the product described is intended solely for installation in a machine.

Before the final product can be put into operation, it must be tested to ensure that it conforms with the Machinery Directive 2006/42/EEC and the Supply of Machinery (Safety) Regulations 2008 (UK).

EC declaration of conformity

The SIMATIC NET products described in these operating instructions meet the requirements and safety objectives of the following EC directives and comply with the harmonized

European standards (EN) which are published in the official documentation of the European Union and here.

- **2014/34/EU (ATEX explosion protection directive)**
  Directive of the European Parliament and the Council of 26 February 2014 on the approximation of the laws of the member states concerning equipment and protective systems intended for use in potentially explosive atmospheres, official journal of the EU L96, 29/03/2014, pages. 309-356
- **2014/30/EU (EMC)**
  EMC directive of the European Parliament and of the Council of February 26, 2014 on the approximation of the laws of the member states relating to electromagnetic compatibility; official journal of the EU L96, 29/03/2014, pages. 79-106
- **2011/65/EU (RoHS)**
  Directive of the European Parliament and of the Council of 8 June 2011 on the restriction of the use of certain hazardous substances in electrical and electronic equipment, official journal of the EC L174, 01/07/2011, pages 88-110

You will find the EC declaration of conformity for these products on the Internet pages of Siemens Industry Online Support (https://support.industry.siemens.com/cs/ww/en/ps/15297/cert).

The EC Declaration of Conformity is available for all responsible authorities at:

Siemens Aktiengesellschaft

Digital Industries
DE-76181 Karlsruhe
Germany

UK Declaration of Conformity

The UK declaration of conformity is available to all responsible authorities at:

Siemens Aktiengesellschaft
Digital Industries
Process Automation
DE-76181 Karlsruhe
Germany

Importer UK:

Siemens plc,
Manchester M20 2UR

You can find the current UK Declaration of Conformity for these products on the Internet pages under Siemens Industry Online Support (https://support.industry.siemens.com/cs/ww/en/ps/15273/cert).

The SIMATIC NET products described in this document meet the requirements of the following directives:

- UK-Regulation
  SI 2016/1107 Equipment and Protective Systems Intended for use in Potentially Explosive Atmospheres Regulations 2016, and related amendments
- EMC Regulation
  SI 2016/1091 Electromagnetic Compatibility Regulations 2016, and related amendments
- RoHS Regulation
  SI 2012/3032 Restriction of the Use of Certain Hazardous Substances in Electrical and Electronic Equipment Regulations 2012, and related amendments

ATEX, IECEx, UKEX and CCC Ex certification

WARNING

Risk of explosion in hazardous areas

When using SIMATIC NET products in hazardous area zone 2, make absolutely sure that the associated conditions in the following document are adhered to:

"SIMATIC NET Product Information Use of subassemblies/modules in a Zone 2 Hazardous Area".

You will find this document

- on the data medium that ships with some devices.
- on the Internet pages under Siemens Industry Online Support (https://support.industry.siemens.com/cs/ww/en/view/78381013).

Enter the document identification number "C234" as the search term.

The markings of the electrical devices are:

II 3 G Ex ec IIC T4 Gc
DEKRA 18ATEX0025 X
DEKRA 21UKEX0001 X
IECEx DEK 18.0017X
Importer UK:
Siemens plc,
Manchester
M20 2UR
(Ex ec IIC T4 Gc, not on the nameplate)

The products meet the requirements of the following standards:

- EN/IEC 60079-7, GB 3836.3
- EN IEC/IEC 60079-0, GB 3836.1

You will find the current versions of the standards in the currently valid certificates.

Note for devices with CLASS 1 LASER

Important note on products certified according to Type Examination Certificate KEMA 07ATEX0145 X as of Issue 95 / DEKRA 18ATEX0025 X and IECEx Certificate of Conformity DEK 14.0025X as of Issue 43 / DEK 18.0017X and containing Class 1 optical radiation sources.

Note

CLASS 1 LASER

The device contains optical radiation sources which comply with the limits of Class 1 according to IEC 60825-1. Fiber-optic cables connected to these optical radiation sources may therefore be routed either to or through hazardous areas requiring Category 2G, 3G, 2D or 3D equipment.

EMC (electromagnetic compatibility)

The SIMATIC NET products described in these operating instructions meet the electromagnetic compatibility requirements according to the EU Directive 2014/30/EU as well as the UK-Regulation SI 2016/1091 and their associated amendments.

Applied standards:

- EN 61000-6-2 Electromagnetic compatibility (EMC) - Part 6-2: Generic standards - Immunity for industrial environments
- EN 61000-6-4 Electromagnetic compatibility (EMC) - Part 6-4: Generic standards - Emission standard for industrial environments

You will find the current versions of the standards in the currently valid EC/UK Declaration of Conformity.

RoHS

The SIMATIC NET products described in these operating instructions meet the requirements on the restriction of the use of certain hazardous substances in electrical and electronic equipment according to the EU Directive 2011/65/EU as well as the UK-Regulation SI 2012/3032 and their associated amendments.

Applied standard:

- EN IEC 63000

FM

The product meets the requirements of the standards:

- Factory Mutual Approval Standard Class Number 3611
- FM Hazardous (Classified) Location Electrical Equipment:
  Non Incendive / Class I / Division 2 / Groups A,B,C,D / T4 and
  Non Incendive / Class I / Zone 2 / Group IIC / T4

cULus Approval for Information Technology Equipment

cULus Listed I. T. E.

Underwriters Laboratories Inc. complying with

- UL 60950-1 (Information Technology Equipment)
- CSA C22.2 No. 60950-1-03

Report no. E115352

cULus Approval Hazardous Location

HAZ. LOC.

cULus Listed I. T. E. FOR HAZ. LOC.

Underwriters Laboratories Inc. complying with

- UL 60950-1 (Information Technology Equipment)
- ANSI/ISA 12.12.01-2007
- CSA C22.2 No. 213-M1987

Approved for use in
Cl. 1, Div. 2, GP A, B, C, D T4
Cl. 1, Zone 2, GP IIC T4

Report no. E240480

Note for Australia - RCM

The product meets the requirements of the RCM standard.

Applied standards:

- AS/NZS CISPR11 (Industrial, scientific and medical equipment - Radio-frequency disturbance characteristics - Limits and methods of measurement).
- EN 61000-6-4 Electromagnetic compatibility (EMC) - Part 6-4: Generic standards - Emission standard for industrial environments

You will find the current versions of the standards in the currently valid RCM SDoCs (Self-Declaration of Conformity).

Marking for the customs union

EAC (Eurasian Conformity)

Eurasian Economic Union of Russia, Belarus, Armenia, Kazakhstan and Kyrgyzstan

Declaration of conformity according to the technical regulations of the customs union (TR ZU)

Device	IEC 60068-2-6 vibration	IEC 60068-2-27 shock
	5 – 9 Hz: 3.5 mm 9 – 150 Hz: 1 g 1 octave/min, 20 sweeps	**15 g, 11 ms duration 6 shocks per axis**
X307-3LD	●	●
X308-2	●	●
X308-2LD	●	●
X308-2LH	●	●
X308-2LH+	●	●
X310	●	●
X310FE	●	●
X320-1FE	●	●
X320-3LD FE	●	●

Installation guidelines

The devices meet the requirements if you adhere to the installation and safety instructions contained in this documentation and in the following documentation when installing and operating the devices.

- "Industrial Ethernet / PROFINET Industrial Ethernet" System Manual (https://support.industry.siemens.com/cs/ww/en/view/27069465)
- "Industrial Ethernet / PROFINET - Passive Network Components" System Manual (https://support.industry.siemens.com/cs/ww/en/view/84922825)
- "EMC Installation Guidelines" configuration manual (https://support.industry.siemens.com/cs/ww/en/view/60612658)

WARNING

Personal injury and property damage can occur

The installation of expansions that are not approved for SIMATIC NET products or their target systems may violate the requirements and regulations for safety and electromagnetic compatibility.

Only use expansions that are approved for the system.

Note

The test was performed with a device and a connected communications partner that also meets the requirements of the standards listed above.

When operating the device with a communications partner that does not comply with these standards, adherence to the corresponding values cannot be guaranteed.

Index

A

Approvals, 81

C

CE mark, 81

D

Documentation, 6

G

Glossary, 8

P

Possible attachments
- SCALANCE X307-3, 25
- SCALANCE X308-2, 27
- SCALANCE X308-2LD, 28
- SCALANCE X308-2LH, 29
- SCALANCE X310, 31
- SCALANCE X320-1 FE, 33
- SCALANCE 307-3LD, 26
- SCALANCE 308-2LH+, 30
- SCALANCE X306-1LD FE, 24
- SCALANCE X310FE, 32
- X320-3LD FE, 34

S

Safety notices
- for installation, 43
- general, 11
- Use in hazardous areas, 11, 43, 51
- when connecting up, 51

SIMATIC NET glossary, 8
SIMATIC NET manual, 8
System manual, 7, 45, 87