Technical Data

Original Instructions

PanelView Plus 7 Performance Terminals

Catalog Numbers 2711P-xxx22x9P, 2711P-xxx22x9P-B, 2711P-xxx22x9PK, 2711P-Txx22D9P-BSHK, 2711P-T12W22D9P-BMxxx

Topic	Page
Summary of Changes	2
Catalog Numbers	2
Environmental Specifications	3
Resistance to Chemicals	4
Certifications	4
Technical Specifications	5
PanelView Plus 7 Performance Terminals	5
PanelView Plus 7 Performance Stainless Steel Terminals	8
ArmorView Plus 7 Terminals	9
Accessories	13
HMI Software	15
Additional Resources	15

The PanelView™ Plus 7 Performance terminals are operator interface devices. They monitor and control devices that are attached to ControlLogix® and CompactLogix™ 5370 controllers on an EtherNet/IP™ network. Animated graphic and text displays provide operators a view into the operating state of a machine or process. Operators interact with the control system by using touch screen or keypad input.

The PanelView Plus 7 Performance terminals include these features and capabilities:

- FactoryTalk® View Machine Edition software provides a familiar environment for creating HMI applications
- Connection to ControlLogix or CompactLogix 5370 controllers
- Ethernet communication that can support Device Level Ring (DLR), linear, or star network topologies
- Conformal coating available for all DC power, touch-only terminals, and the 15-in. DC power, keypad and touch terminal
- Stainless steel, hygienic, brandless, DC-power, and conformal coating are available for the touch-only units in the 9-in. wide screen, 10-in., 12-in. wide screen, and 15-in. terminal sizes
- On-machine mounting available for the 12.1-in. wide screen, touch-only terminals

Summary of Changes

This publication contains new and updated information as indicated in the following table.

Topic	Page
Added 10-in. and 15-in. stainless steel catalog numbers and information	Throughout
Corrected the Corrosive Atmosphere rating information in the Environmental Specifications table	3
Updated the CE (LVD), KDD, and RoHS information in the Certifications table	4

Catalog Numbers

This publication is applicable to these currently available PanelView Plus 7 Performance terminals.

PanelView Plus 7 Performance	2711P-T7C22D9P, 2711P-B7C22D9P, 2711P-T9W22D9P, 2711P-T10C22D9P, 2711P-B10C22D9P, 2711P-T12W22D9P, 2711P-T15C22D9P, 2711P-B15C22D9P, 2711P-T19C22D9P
PanelView Plus 7 Performance Conformal Coated	2711P-T7C22D9PK, 2711P-T9W22D9PK, 2711P-T10C22D9PK, 2711P-T12W22D9PK, 2711P-T15C22D9PK, 2711P-T19C22D9PK, 2711P-B15C22D9PK
PanelView Plus 7 Performance Brandless	2711P-T7C22D9P-B, 2711P-B7C22D9P-B, 2711P-T9W22D9P-B, 2711P-T10C22D9P-B, 2711P-B10C22D9P-B, 2711P-T12W22D9P-B, 2711P-T15C22D9P-B, 2711P-B15C22D9P-B, 2711P-T19C22D9P-B
PanelView Plus 7 Performance Stainless Steel	2711P-T9W22D9P-BSHK, 2711P-T10C22D9P-BSHK, 2711P-T12W22D9P-BSHK, 2711P-T15C22D9P-BSHK
ArmorView Plus 7	2711P-T12W22D9P-BM001, 2711P-T12W22D9P-BM002, 2711P-T12W22D9P-BM003, 2711P-T12W22D9P-BM004, 2711P-T12W22D9P-BM005, 2711P-T12W22D9P-BM006, 2711P-T12W22D9P-BM007, 2711P-T12W22D9P-BM008, 2711P-T12W22D9P-BM009, 2711P-T12W22D9P-BM010, 2711P-T12W22D9P-BM011, 2711P-T12W22D9P-BM012, 2711P-T12W22D9P-BM013, 2711P-T12W22D9P-BM014, 2711P-T12W22D9P-BM015, 2711P-T12W22D9P-BM016

This publication is also applicable to these discontinued PanelView Plus 7 Performance terminals.

PanelView Plus 7 Performance	2711P-T7C22A9P, 2711P B7C22A9P, 2711P-T9W22A9P, 2711P-T10C22A9P, 2711P-B10C22A9P, 2711P-T12W22A9P, 2711P-T15C22A9P, 2711P-B15C22A9P, 2711P-T19C22A9P
PanelView Plus 7 Performance Brandless	2711P-T7C22A9P-B, 2711P-B7C22A9P-B, 2711P-T9W22A9P-B, 2711P-T10C22A9P-B, 2711P-B10C22A9P-B, 2711P-T12W22A9P-B, 2711P-T15C22A9P-B, 2711P-B15C22A9P-B, 2711P-T19C22A9P-B

PanelView Plus 7 Performance terminal catalog numbers ending in:

- 'K' are conformal coated for extended protection in harsh, corrosive environments
- '-B' exclude the Allen-Bradley brand marking. You can put your own brand labels on these terminals
- 'BSHK' are conformal coated, brandless, and feature a stainless-steel 316 bezel

Environmental Specifications

This table lists environmental specifications for the PanelView Plus 7 Performance and ArmorView™ Plus 7 terminals.

Environmental Specifications

Attribute	Value
Temperature, operating	6.5-in., 9-in., 10.4-in., 12.1-in., and 15-in. terminals 0...55 °C (32...131 °F) 19-in. terminals (Series A) 0...50 °C (32...122 °F) 19-in. terminals (Series B) 0...55 °C (32...131 °F) ArmorView Plus 7 terminals 0...50 °C (32...122 °F) ambient(1)
Temperature, nonoperating	-25...+70 °C (-13...+158 °F)(2)
Heat dissipation	Typical BTU measurements were taken at 25 °C (77 °F): 6.5-in. DC (touch, and touch with keypad), 51 BTU (typical) (Series B, 38 BTU) 6.5-in. AC (touch, and touch with keypad), 53 BTU (typical) 9-in. DC, 55 BTU (typical) Series A (Series B for stainless steel) 9-in. DC, 41 BTU (typical) Series B (Series C for stainless steel) 9-in. AC, 58 BTU (typical) 10.4-in. DC (touch, and touch with keypad) Series A, 51 BTU (typical) 10.4-in. DC (touch, and touch with keypad) Series B (Series C for stainless steel), 48 BTU (typical) 10.4-in. AC (touch, and touch with keypad), 56 BTU (typical) 12.1-in. DC Series A (Series B for stainless steel), 60 BTU (typical) 12.1-in. DC Series B (Series C for stainless steel), 49 BTU (typical) 12.1-in. AC, 67 BTU (typical) 15-in. DC (touch, and touch with keypad) Series A, 61 BTU (typical) 15-in. DC (touch, and touch with keypad) Series B (Series C for stainless steel), 71 BTU (typical) 15-in. AC (touch, and touch with keypad), 68 BTU (typical) 19-in. DC, 114 BTU (typical) (Series B, 92 BTU) 19-in. AC, 119 BTU (typical)
Altitude, operating	2000 m (6562 ft)(2)
Relative humidity	5...95% without condensation(2)
Vibration	6.5-in., 9-in., 10.4-in., 12.1-in. terminals, and 12.1-in. terminal in the ArmorView Plus 7 enclosure 0.012 pk-pk, 10...57 Hz 2 g peak at 57...500 Hz 15-in. and 19-in. terminals 0.006 pk-pk, 10...57 Hz 1 g peak at 57...640 Hz
Shock, operating	15 g at 11 ms(3)
Shock, nonoperating	30 g at 11 ms(3)
Enclosure ratings	NEMA and UL Type 12, 13, 4X, also rated IP66 as Classified by UL(4) (5)
Corrosive Atmosphere(6) ASTM B845-97 Method K Accelerated Test (20-Day Exposure)	Severity Level G3(7)(8) per ANSI/ISA 71.04-2013, Airborne Contaminants—Gases Severity Level CX(7) per IEC 60721-3-3:2019, Chemically Active Substances

(1) The optional I/O plate (included in the VESA Mounting Kit—2711P-RVESA01) is rated to 0...45 °C (32...113 °F).
(2) These values are the same for the ArmorView Plus 7 terminals.
(3) These values are the same for the ArmorView Plus 7 terminals when the VESA mount is used. When the arm mount coupling is used, the values are 5 g at 11 ms.
(4) The ArmorView Plus 7 terminals enclosure ratings are 12, 13, 4, or 4X (see the ArmorView Plus 7 Installation Instructions, publication 2711P-IN013 for more detail) and IP66 as classified by UL.
(5) The PanelView Plus 7 Performance Stainless Steel Series B and Series C terminals are also rated IP69 as Classified by UL and tested for IP69K according to ISO 20653.
(6) Only applicable to terminals that have a 'K' or "BSHK" in the catalog number.
(7) Port plugs/covers must remain installed in unused ports at all times during storage and operation for the product to maintain its corrosive atmosphere rating.
(8) Up to 86.4 g/(m^2·yr), mass loss of copper due to corrosion.

Resistance to Chemicals

The outer surfaces of the terminal including the bezel, touch screen overlay, and panel gasket seal are tested for chemical resistance. Some of the chemicals can cause discoloration, but they do not interfere with the operation of the terminal.

For more information on the chemical resistance of the product, go to https://rockwellautomation.custhelp.com and search the Knowledgebase using the keywords, 'Chemical Resistance PanelView Plus'.

IMPORTANT Do not operate the terminal in direct sunlight. Direct exposure to ultraviolet light can discolor the touch screen.

Certifications

This table lists certifications for the PanelView Plus 7 Performance terminals.

Certification[1]	Value
CE (EMC)	European Union 2014/35/EU EMC Directive, compliant with: EN 61000-6-2; Industrial Immunity EN 61000-6-4; Industrial Emissions EN 61131-2; Programmable Controllers
CE (LVD)[2]	European Union 2014/30/EU Low Voltage Directive, compliant with: EN 61010-2-201; Safety Requirements for Control Equipment
c-UL-us	Both ArmorView Plus 7 (E113724) and PanelView Plus 7 Performance (UL Category Control Number E10314) terminals hold the following certifications: • c-UL-us Listed Industrial Control Equipment for US and Canada per standards UL 61010-1, UL 61010-2-201, CSA-C22.2 No. 61010-1, and CSA-C22.2 No. 61010-2-201. • Enclosure type ratings per UL50 and CSA C22.2 No. 94.2. • Enclosure ingress protection that is classified by UL per IEC 60529. In addition, PanelView Plus 7 Performance (E10314) terminals hold the following certifications: • cULus Listed Industrial Control Equipment for use in Hazardous Locations per standards ANSI/ISA 12.12.01 and CSA C22.2 No. 213 rated: – Class I, Div 2, Groups A, B, C, D – Class II, Div 2, Groups F and G – Class III, Div 1 and 2
EtherNet/IP	ODVA conformance that is tested to EtherNet/IP specifications
KCC	Certificate of compliance R-R-RAA-2711P-12BM for ArmorView Plus 7 MSIP-REM-RAA-2711P-X22XP for PanelView Plus 7 Performance
NSF	Stainless Steel Series B and C Terminals only, compliant with: • NSF/ANSI/3-A 14159-1; Hygiene Requirements for the Design of Meat and Poultry Processing Equipment • NSF/ANSI 169; Special Purpose Food Equipment and Devices
RCM	Australian Radiocommunications Act, compliant with: AS/NZS CISPR 11; Industrial Emissions
RoHS	China RoHS, Türkiye RoHS, KSA RoHS, UAE RoHS, European RoHS 2011/65/EU (incorporating 2015/863)
UKCA	BS EN 61010-2-201; Safety Requirements for Control Equipment BS EN 61131-2; Programmable Controllers
Morocco	NM EN 61010-2-201; Safety Requirements for Control Equipment NM EN 61131-2; Programmable Controllers

(1) When marked. See the Product Certification link at rok.auto/certification for Declarations of Conformity, Certificates, and other certification details.
(2) This EU directive does not apply to PanelView products with a voltage rating under 50 Vac or 75 Vdc.

Technical Specifications

PanelView Plus 7 Performance Terminals

Technical Specifications - PanelView Plus 7 Performance 7-in and 9-in Terminals

Attribute	6.5-in. Touch		6.5-in. Touch with Keypad		9-in. Touch	
	2711P--T7C22D9P, 2711P--T7C22D9P-B, 2711P-T7C22D9PK	2711P-T7C22A9P, 2711P-T7C22A9P-B	2711P-B7C22D9P, 2711P-B7C22D9P-B	2711P-B7C22A9P, 2711P-B7C22A9P-B	2711P-T9W22D9P, 2711P-T9W22D9P-B, 2711P-T9W22D9PK	2711P-T9W22A9P, 2711P-T9W22A9P-B
Operator input	Touch		Touch with keypad		Touch	
Display type	TFT Color					
Display size, diagonal	6.5-in.				9-in. widescreen	
Viewing area (W x H)	132 x 99 mm (5.2 x 3.9 in.)				196 x 118 mm (7.7 x 4.6 in.)	
Display resolution	**(Series A)** 640 x 480 VGA, 18-bit color graphics **(Series B)** 640 x 480 VGA, 24-bit color graphics				**(Series A)** 800 x 480 WVGA, 18-bit color graphics **(Series B)** 800 x 480 WVGA, 24-bit color graphics	
Aspect ratio	4:3				5:3	
Brightness, typical	300 cd/m^2 (nits) or more					
Backlight life	White light-emitting diode, solid-state Life: 50,000 h min at 40 °C (104 °F) to half-brightness, backlight is not replaceable					
Touch screen	Analog resistive Actuation rating: 1 million presses Operating force: 100 grams					
Battery (real-time clock backup)	Accuracy: ±2 minutes per month. Battery life: 4 years min at 25 °C (77 °F) Replacement: CR2032 lithium coin cell					
Memory: • System • User	**(Series A)** 512 MB RAM and 512 MB storage 80 MB, approx, nonvolatile storage for applications **(Series B)** 4 GB RAM and 19.87 GB storage 2 GB, approx, nonvolatile storage for applications					
Secure Digital (SD) card slots	One SD card slot for external storage; supports cat. no. 1784-SD*x* and 1784-SDHC*x* cards					
USB ports: • Host • Device	**(Series A)** Two USB high-speed 2.0 host ports (type A) support removable flash drives for external storage One high-speed 2.0 device port (type B) that will be functional in a future release **(Series B)** One USB high-speed 3.0 host port (only supports up to 500 mA current output) and one USB 2.0 host port (Type A) supports removable flash drives for external storage One high-speed 2.0 device port (type B) that will be functional in a future release					
Operating system	**(Series A)** Windows® CE 6.0 with Extended Features and Microsoft Office Viewers (includes FTP, VNC client server, ActiveX controls, PDF reader, third-party device support) **(Series B)** Windows 10 IoT Core					
Ethernet ports	Two 10/100Base-T, Auto MDI/MDIX Ethernet ports that support Device Level Ring (DLR), linear, or star network topologies					
Software	FactoryTalk View Studio for Machine Edition, FactoryTalk ViewPoint, version 2.6 or later					
Input voltage	24V DC nom (18...30V DC)	100...240V AC	24V DC nom (18...30V DC)	100...240V AC	24V DC nom (18...30V DC)	100...240V AC
Power consumption	**(Series A)** 50 W max (2.1 A at 24V DC) **(Series B)** 29 W max	105VA	**(Series A)** 50 W max (2.1 A at 24V DC) **(Series B)** 29 W max	105VA	**(Series A)** 50 W max (2.1 A at 24V DC) **(Series B)** 30 W max	105VA
Power supply	Supports (SELV) and (PELV) 24V DC supplies(1)	–	Supports (SELV) and (PELV) 24V DC supplies(1)	–	Supports (SELV) and (PELV) 24V DC supplies(1)	–
Weight, approx	1.2 kg (2.65 lb)		1.47 kg (3.25 lb)		1.58 kg (3.48 lb)	
Dimensions, approx (H x W x D)	170 x 212 x 69.6 mm (6.69 x 8.35 x 2.74 in.)		179 x 285 x 69.6 mm (7.05 x 11.22 x 2.74 in.)		190 x 280 x 69.6 mm (7.48 x 11.02 x 2.74 in.)	
Cutout dimensions, approx (H x W)	142 x 184 mm (5.59 x 7.24 in.)		142 x 237 mm (5.59 x 9.33 in.)		162 x 252 mm (6.38 x 9.92 in.)	

(1) DC-powered terminals support safety extra low voltage (SELV) and protective extra low voltage (PELV) 24V DC power supplies such as cat. nos. 1606-XLP95E, 1606-XLP100E, 2711P-RSACDIN.

Technical Specifications - PanelView Plus 7 Performance 10-in and 12-in Terminals

Attribute	10.4-in. Touch		10.4-in. Touch with Keypad		12.1-in. Touch	
	2711P-T10C22D9P, 2711P-T10C22D9P-B, 2711P-T10C22D9PK	2711P-T10C22A9P, 2711P-T10C22A9P-B	2711P-B10C22D9P, 2711P-B10C22D9P-B	2711P-B10C22A9P, 2711P-B10C22A9P-B	2711P-T12W22D9P, 2711P-T12W22D9P-B, 2711P-T12W22D9PK	2711P-T12W22A9P, 2711P-T12W22A9P-B
Operator input	Touch		Touch with keypad		Touch	
Display type	TFT Color					
Display size, diagonal	10.4-in.				12.1-in. wide screen	
Viewing area (W x H)	211 x 158 mm (8.3 x 6.2 in.)				261 x 163 mm (10.3 x 6.4 in.)	
Display resolution	**(Series A)** 800 x 600 VGA, 18-bit color graphics **(Series B)** 800 x 600 VGA, 24-bit color graphics				**(Series A)** 1280 x 800 WXGA, 18-bit color graphics **(Series B)** 1280 x 800 WXGA, 24-bit color graphics	
Aspect ratio	4:3				16:10	
Brightness, typical	300 cd/m2 (Nits) or more					
Backlight life	White light-emitting diode, solid-state Life: 50,000 h min at 40 °C (104 °F) to half-brightness, backlight is not replaceable					
Touch screen	Analog resistive Actuation rating: 1 million presses Operating force: 100 grams					
Battery (real-time clock backup)	Accuracy: ±2 minutes per month. Battery life: 4 years min at 25 °C (77 °F) Replacement: CR2032 lithium coin cell					
Memory: • System • User	**(Series A)** 512 MB RAM and 512 MB storage 80 MB, approx, nonvolatile storage for applications **(Series B)** 4 GB RAM and 19.87 GB storage 2 GB, approx, nonvolatile storage for applications					
Secure Digital (SD) card slot	One SD card slot for external storage; supports cat. no. 1784-SD*x* and 1784-SDHC*x* cards					
USB ports: • Host • Device	**(Series A)** Two USB high-speed 2.0 host ports (type A) support removable flash drives for external storage One high-speed 2.0 device port (type B) that will be functional in a future release **(Series B)** One USB high-speed 3.0 host port and one USB 2.0 host port (Type A) supports removable flash drives for external storage One high-speed 2.0 device port (type B) that will be functional in a future release					
Operating system	**(Series A)** Windows CE 6.0 with Extended Features and Microsoft Office Viewers (includes FTP, VNC client server, ActiveX controls, PDF reader, third-party device support) **(Series B)** Windows 10 IoT Core					
Ethernet ports	Two 10/100Base-T, Auto MDI/MDIX Ethernet ports that support Device Level Ring (DLR), linear, or star network topologies					
Software	FactoryTalk View Studio for Machine Edition, FactoryTalk ViewPoint, version 2.6 or later					
Input voltage	24V DC nom (18...30V DC)	100...240V AC	24V DC nom (18...30V DC)	100...240V AC	24V DC nom (18...30V DC)	100...240V AC
Power consumption	**(Series A)** 50 W max (2.1 A at 24V DC) **(Series B)** 32 W max	105VA	**(Series A)** 50 W max (2.1 A at 24V DC) **(Series B)** 32 W max	105VA	**(Series A)** 50 W max (2.1 A at 24V DC) **(Series B)** 33 W max	105VA
Power supply	Supports (SELV) and (PELV) 24V DC supplies[1]	–	Supports (SELV) and (PELV) 24V DC supplies[1]	–	Supports (SELV) and (PELV) 24V DC supplies[1]	–
Weight, approx	2.28 kg (5.03 lb)		2.58 kg (5.69 lb)		2.54 kg (5.60 lb)	
Dimensions, approx (H x W x D)	252 x 297 x 69.6 mm (9.92 x 11.69 x 2.74 in.)		252 x 385 x 69.6 mm (9.92 x 15.16 x 2.74 in.)		240 x 340 x 69.6 mm (9.69 x 13.39 x 2.74 in.)	
Cutout dimensions, approx (H x W)	224 x 269 mm (8.82 x 10.59 in.)		224 x 335 mm (8.82 x 13.19 in.)		218 x 312 mm (8.58 x 12.28 in.)	

(1) DC-powered terminals support safety extra low voltage (SELV) and protective extra low voltage (PELV) 24V DC power supplies such as cat. nos. 1606-XLP95E, 1606-XLP100E, 2711P-RSACDIN.

Technical Specifications - PanelView Plus 7 Performance 15-in and 19-in Terminals

Attribute	15-in. Touch		15-in. Touch with Keypad		19-in. Touch	
	2711P-T15C22D9P, 2711P-T15C22D9P-B, 2711P-T15C22D9PK	2711P-T15C22A9P, 2711P-T15C22A9P-B	2711P-B15C22D9P, 2711P-B15C22D9P-B, 2711P-B15C22D9PK	2711P-B15C22A9P, 2711P-B15C22A9P-B	2711P-T19C22D9P, 2711P-T19C22D9P-B, 2711P-T19C22D9PK	2711P-T19C22A9P, 2711P-T19C22A9P-B
Operator input	Touch		Touch with keypad		Touch	
Display type	TFT Color					
Display size, diagonal	15-in.				19-in.	
Viewing area (W x H)	304 x 228 mm (12.0 x 9.0 in.)				376 x 301 mm (14.8 x 11.9 in.)	
Display resolution	**(Series A)** 1024 x 768 XGA, 18-bit color graphics **(Series B)** 1024 x 768 XGA, 24-bit color graphics				**(Series A)** 1280 x 1024 SXGA, 18-bit color graphics **(Series B)** 1280 x 1024 SXGA, 24-bit color graphics	
Aspect ratio	4:3				5:4	
Brightness, typical	300 cd/m2 (nits) or more					
Backlight life	White light-emitting diode, solid-state Life: 50,000 h min at 40 °C (104 °F) to half-brightness, backlight is not replaceable					
Touch screen	Analog resistive Actuation rating: 1 million presses Operating force: 100 grams					
Battery (real-time clock backup)	Accuracy: ±2 minutes per month. Battery life: 4 years min at 25 °C (77 °F) Replacement: CR2032 lithium coin cell					
Memory: • System • User	**(Series A)** 512 MB RAM and 512 MB storage 80 MB, approx, nonvolatile storage for applications **(Series B)** 4 GB RAM and 19.87 GB storage 2 GB, approx, nonvolatile storage for applications					
Secure Digital (SD) card slot	One SD card slot for external storage; supports cat. no. 1784-SD*x* and 1784-SDHC*x* cards					
USB ports: • Host • Device	**(Series A)** Two USB high-speed 2.0 host ports (type A) support removable flash drives for external storage One high-speed 2.0 device port (type B) that will be functional in a future release **(Series B)** One USB high-speed 3.0 host port and one USB 2.0 host port (Type A) supports removable flash drives for external storage One high-speed 2.0 device port (type B) that will be functional in a future release					
Operating system	**(Series A)** Windows CE 6.0 with Extended Features and Microsoft Office Viewers (includes FTP, VNC client server, ActiveX controls, PDF reader, third-party device support) **(Series B)** Windows 10 IoT Core					
Ethernet ports	Two 10/100Base-T, Auto MDI/MDIX Ethernet ports that support Device Level Ring (DLR), linear, or star network topologies					
Software	FactoryTalk View Studio for Machine Edition, FactoryTalk ViewPoint, version 2.6 or later					
Input voltage	24V DC nom (18...30V DC)	100...240V AC	24V DC nom (18...30V DC)	100...240V AC	24V DC nom (18...30V DC)	100...240V AC
Power consumption	**(Series A)** 50 W max (2.1 A at 24V DC) **(Series B)** 39 W max	105VA	**(Series A)** 50 W max (2.1 A at 24V DC) **(Series B)** 39 W max	105VA	**(Series A)** 50 W max (2.1 A at 24V DC) **(Series B)** 45 W max	105VA
Power supply	Supports (SELV) and (PELV) 24V DC supplies[1]	–	Supports (SELV) and (PELV) 24V DC supplies[1]	–	Supports (SELV) and (PELV) 24V DC supplies[1]	–
Weight, approx	3.69 kg (8.14 lb)		4.14 kg (9.13 lb)		5.62 kg (12.40 lb)	
Dimensions, approx (H x W x D)	318 x 381 x 69.6 mm (12.52 x 15.00 x 2.74 in)		322 x 484 x 69.6 mm (12.68 x 19.06 x 2.74 in)		411 x 485 x 69.6 mm (16.18 x 19.09 x 2.74 in)	
Cutout dimensions, approx (H x W)	290 x 353 mm (11.42 x 13.90 in)		290 x 418 mm (11.42 x 16.46 in)		383 x 457 mm (15.08 x 17.99 in)	

(1) DC-powered terminals support safety extra low voltage (SELV) and protective extra low voltage (PELV) 24V DC power supplies such as cat. nos. 1606-XLP95E, 1606-XLP100E, 2711P-RSACDIN.

PanelView Plus 7 Performance Stainless Steel Terminals

Technical Specifications - PanelView Plus 7 Performance Stainless Steel Terminals

Attribute	9-in. Touch 2711P-T9W22D9P-BSHK	10.4-in. Touch 2711P-T10C22D9P-BSHK	12.1-in. Touch 2711P-T12W22D9P-BSHK	15-in. Touch 2711P-T15C22D9P-BSHK
Operator input	Touch			
Display type	TFT Color			
Display size, diagonal	9-in. wide screen	10.4-in. screen	12.1-in. wide screen	15-in. screen
Viewing area (W x H)	196 x 118 mm (7.7 x 4.6 in.)	211 x 158 mm (8.3 x 6.2 in.)	261 x 163 mm (10.3 x 6.4 in.)	304 x 228 mm (12.0 x 9.0 in.)
Display resolution	**(Series B)** 800 x 480 WVGA, 18-bit color graphics **(Series C)** 800 x 480 WVGA, 24-bit color graphics	**(Series C)** 800 x 600 SVGA, 24-bit color graphics	**(Series B)** 1280 x 800 WXGA, 18-bit color graphics **(Series C)** 1280 x 800 WXGA, 24-bit color graphics	**(Series C)** 1024 x 768 XGA, 24-bit color graphics
Aspect ratio	5:3	4:3	16:10	4:3
Brightness, typical	300 cd/m2 (nits) or more			
Backlight life	White light-emitting diode, solid-state Life: 50,000 h min at 40 °C (104 °F) to half-brightness, backlight is not replaceable			
Touch screen	Analog resistive Actuation rating: 1 million presses Operating force: 100 grams			
Battery (real-time clock backup)	Accuracy: ±2 minutes per month Battery life: 4 years min at 25 °C (77 °F) Replacement: CR2032 lithium coin cell			
Memory: • System • User	**(Series B)** 512 MB RAM and 512 MB storage 80 MB, approx, nonvolatile storage for applications **(Series C)** 4 GB RAM and 19.87 GB storage 2 GB, approx, nonvolatile storage for applications	**(Series C)** 4 GB RAM and 19.87 GB storage 2 GB, approx, nonvolatile storage for applications	**(Series B)** 512 MB RAM and 512 MB storage 80 MB, approx, nonvolatile storage for applications **(Series C)** 4 GB RAM and 19.87 GB storage 2 GB, approx, nonvolatile storage for applications	**(Series C)** 4 GB RAM and 19.87 GB storage 2 GB, approx, nonvolatile storage for applications
Secure Digital (SD) card slot	One SD card slot for external storage; supports cat. no. 1784-SD*x* and 1784-SDHC*x* cards			
USB ports: • Host • Device	**(Series B)** Two USB high-speed 2.0 host ports (type A) support removable flash drives for external storage One high-speed 2.0 device port (type B) that will be functional in a future release **(Series C)** One USB high-speed 3.0 host port and one USB 2.0 host port (Type A) supports removable flash drives for external storage One high-speed 2.0 device port (type B) that will be functional in a future release	**(Series C)** One USB high-speed 3.0 host port and one USB 2.0 host port (Type A) supports removable flash drives for external storage One high-speed 2.0 device port (type B) that will be functional in a future release	**(Series B)** Two USB high-speed 2.0 host ports (type A) support removable flash drives for external storage One high-speed 2.0 device port (type B) that will be functional in a future release **(Series C)** One USB high-speed 3.0 host port and one USB 2.0 host port (Type A) supports removable flash drives for external storage One high-speed 2.0 device port (type B) that will be functional in a future release	**(Series C)** One USB high-speed 3.0 host port and one USB 2.0 host port (Type A) supports removable flash drives for external storage One high-speed 2.0 device port (type B) that will be functional in a future release
Operating system	**(Series B)** Windows CE 6.0 with Extended Features and Microsoft Office Viewers (includes FTP, VNC client server, ActiveX controls, PDF reader, third-party device support) **(Series C)** Windows 10 IoT Core	**(Series C)** Windows 10 IoT Core	**(Series B)** Windows CE 6.0 with Extended Features and Microsoft Office Viewers (includes FTP, VNC client server, ActiveX controls, PDF reader, third-party device support) **(Series C)** Windows 10 IoT Core	**(Series C)** Windows 10 IoT Core
Ethernet ports	Two 10/100Base-T, Auto MDI/MDIX Ethernet ports that support Device Level Ring (DLR), linear, or star network topologies			
Software	FactoryTalk View Studio for Machine Edition, FactoryTalk ViewPoint, version 2.6 or later			
Input voltage	24V DC nom (18...30V DC)			
Power consumption	**(Series B)** 50 W max (2.1 A at 24V DC) **(Series C)** 30 W max	**(Series C)** 32 W max	**(Series B)** 50 W max (2.1 A at 24V DC) **(Series C)** 33 W max	**(Series C)** 39 W max
Power supply	Supports (SELV) and (PELV) 24V DC supplies(1)			
Stainless-steel bezel	316 stainless steel with hygienic No. 4 finish			
Silicone gasket	Gasket material is compliant with FDA 21 CFR 177.2600			
Weight, approx	2.1 kg (4.6 lb)	3.25 kg (7.2 lbs)	3.7 kg (8.2 lb)	4.7 kg (10.4 lbs)
Dimensions, approx (H x W x D)	190 x 280 x 69.6 mm (7.48 x 11.02 x 2.74 in.)	252 x 297 x 69.6 mm (9.92 x 11.69 x 2.74 in.)	240 x 340 x 69.6 mm (9.69 x 13.39 x 2.74 in.)	318 x 381 x 69.6 mm 12.52 x 15.00 x 2.74 in
Cutout dimensions, approx (H x W)	162 x 252 mm (6.38 x 9.92 in.)	224 x 269 mm (8.82 x 10.59 in.)	218 x 312 mm (8.58 x 12.28 in.)	290 x 353 mm 11.42 x 13.90 in

(1) DC-powered terminals support safety extra low voltage (SELV) and protective extra low voltage (PELV) 24V DC power supplies such as cat. nos. 1606-XLP95E, 1606-XLP100E, 2711P-RSACDIN.

ArmorView Plus 7 Terminals

Technical Specifications - ArmorView Plus 7 Terminals

Attribute	12.1 in. Touch	
	2711P-T12W22D9P-BM001, 2711P-T12W22D9P-BM002	2711P-T12W22D9P-BM003...2711P-T12W22D9P-BM016
Operator input	Touch	Touch screen and push button, selector switches, or keyswitches
Display type	TFT Color	
Display size, diagonal	12.1-in. wide screen	
Viewing area (W x H)	261 x 163 mm (10.3 x 6.4 in.)	
Display resolution	**(Series A)** 1280 x 800 WXGA, 18-bit color graphics **(Series B)** 1280 x 800 WXGA, 24-bit color graphics	
Aspect ratio	16:10	
Brightness, typical	300 cd/m2 (nits) or more	
Backlight life	White light-emitting diode, solid-state Life: 50,000 h min at 40 °C (104 °F) to half-brightness, backlight is not replaceable	
Touch screen	Analog resistive Actuation rating: 1 million presses Operating force: 100 grams	
E-stop	–	Illuminated twist-to-release 300,000 cycles
Push buttons	–	Momentary push buttons 10,000,000 cycles
Selector switches	–	Two-position selector, three-position selector, three-position key selector 1,000,000 cycles
Battery (real-time clock backup)	Accuracy: ±2 minutes per month Battery life: 4 years min at 25 °C (77 °F) Replacement: CR2032 lithium coin cell	
Memory: • System • User	**(Series A)** 512 MB RAM and 512 MB storage 80 MB, approx, nonvolatile storage for applications **(Series B)** 4 GB RAM and 19.87 GB storage 2 GB, approx, nonvolatile storage for applications	
Secure Digital (SD) card slot	One SD card slot for external storage; supports cat. nos. 1784-SD*x* and 1784-SDHC*x* cards	
USB ports: • Host • Device	**(Series A)** Two USB high-speed 2.0 host ports (type A) support removable flash drives for external storage One high-speed 2.0 device port (type B) that will be functional in a future release **(Series B)** One USB high-speed 3.0 host port and one USB 2.0 host port (Type A) supports removable flash drives for external storage One high-speed 2.0 device port (type B) that will be functional in a future release	
Operating system	**(Series A)** Windows CE 6.0 with Extended Features and MS Office Viewers (includes FTP, VNC client server, ActiveX controls, PDF reader, third-party device support) **(Series B)** Windows 10 IoT Core	
Ethernet ports	Two 10/100Base-T, Auto MDI/MDIX Ethernet ports that support Device Level Ring (DLR), linear, or star network topologies	
Software	FactoryTalk View Studio for Machine Edition, FactoryTalk ViewPoint, version 2.6 or later	
Input voltage	24V DC nom (18...30V DC)	
Power consumption	37 W max (1.54 A at 24V DC)	
Power supply	Supports (SELV) and (PELV) 24V DC supplies(1)	
Weight, approx (with arm adapter)	7.41 kg (16.34 lb)	
Weight, approx (with VESA Kit)	8.19 kg (18.06 lb)	
Dimensions with arm adapter, approx (H x W x D)	381.6 x 345 x 166.6 mm (15.02 x 13.58 x 6.56 in.)	
Dimensions with I/O plate, approx (H x W x D)	345 x 345 x 166.6 mm (13.58 x 13.58 x 6.56 in.)	

(1) DC-powered terminals support safety extra low voltage (SELV) and protective extra low voltage (PELV) 24V DC power supplies such as cat. nos. 1606-XLP95E, 1606-XLP100E, 2711P-RSACDIN.

Product Dimensions

PanelView Plus 7 Performance Terminals

This section provides product dimensions for the PanelView Plus 7 Performance terminals. The PanelView Plus 7 Performance 10.4-inch touch and combination keypad with touch devices are shown for illustrative purposes. Stainless steel terminals use different mounting clips, but the dimensions are the same. Dimensions for the 12.1-in. ArmorView Plus 7 terminals can be found on page 11.

PanelView Plus 7 Performance Terminal Dimensions - 10.4-in. Model

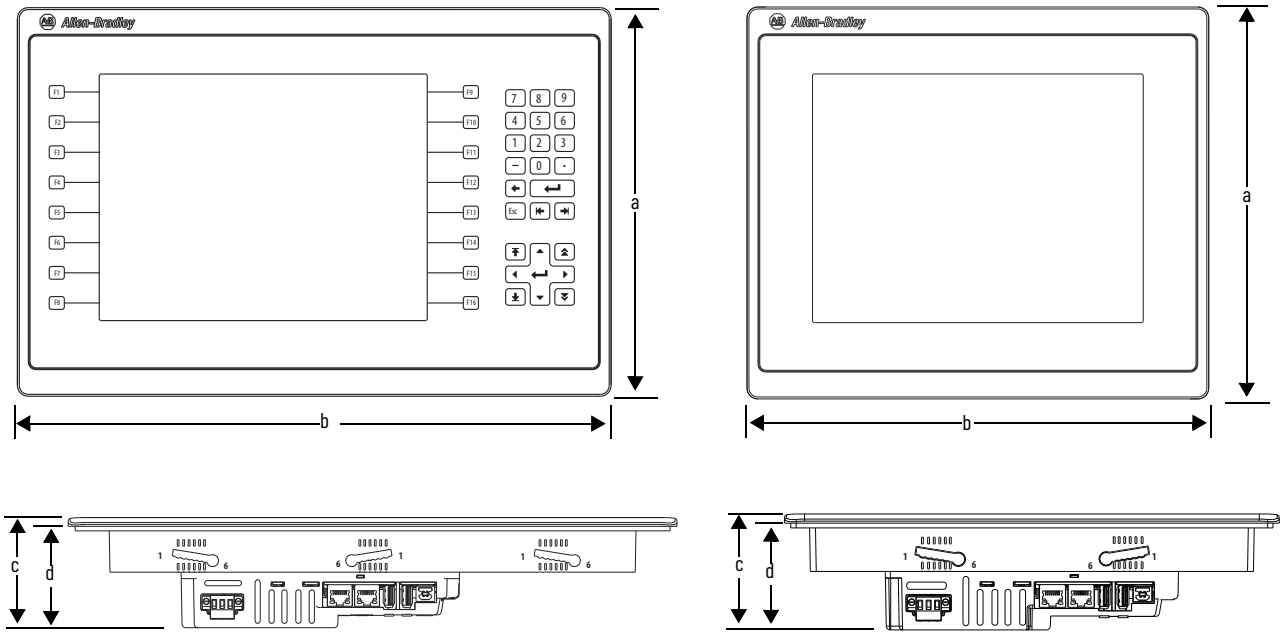

PanelView Plus 7 Performance Terminal Dimensions

Terminal Size	Input Type	Height (a) mm (in.)	Width (b) mm (in.)	Overall Depth (c) mm (in.)	Mounted Depth (d) mm (in.)
6.5-in.	Key/touch	179 (7.05)	285 (11.22)	69.6 (2.74)	63.6 (2.50)
	Touch	170 (6.69)	212 (8.35)		
9-in.	Touch	190 (7.48)	280 (11.02)		
10.4-in.	Key/touch	252 (9.92)	385 (15.16)		
	Touch	252 (9.92)	297 (11.69)		
12.1-in.	Touch	246 (9.69)	340 (13.39)		
15-in.	Key/touch	322 (12.68)	484 (19.06)		
	Touch	318 (12.52)	381 (15.00)		
19-in.	Touch	411 (16.18)	485 (19.09)		

When mounted in a panel, the front of the bezel extends less than 6.36 mm (0.25 in.) from the front of the panel.

ArmorView Plus 7 Terminals

This section provides product dimensions for the ArmorView Plus 7 terminals. This terminal provides options for mounting on an arm mount system, a pedestal, or VESA bracket (with the use of an optional VESA kit).

ArmorView Plus 7 Terminals Dimensions with Arm Adapter

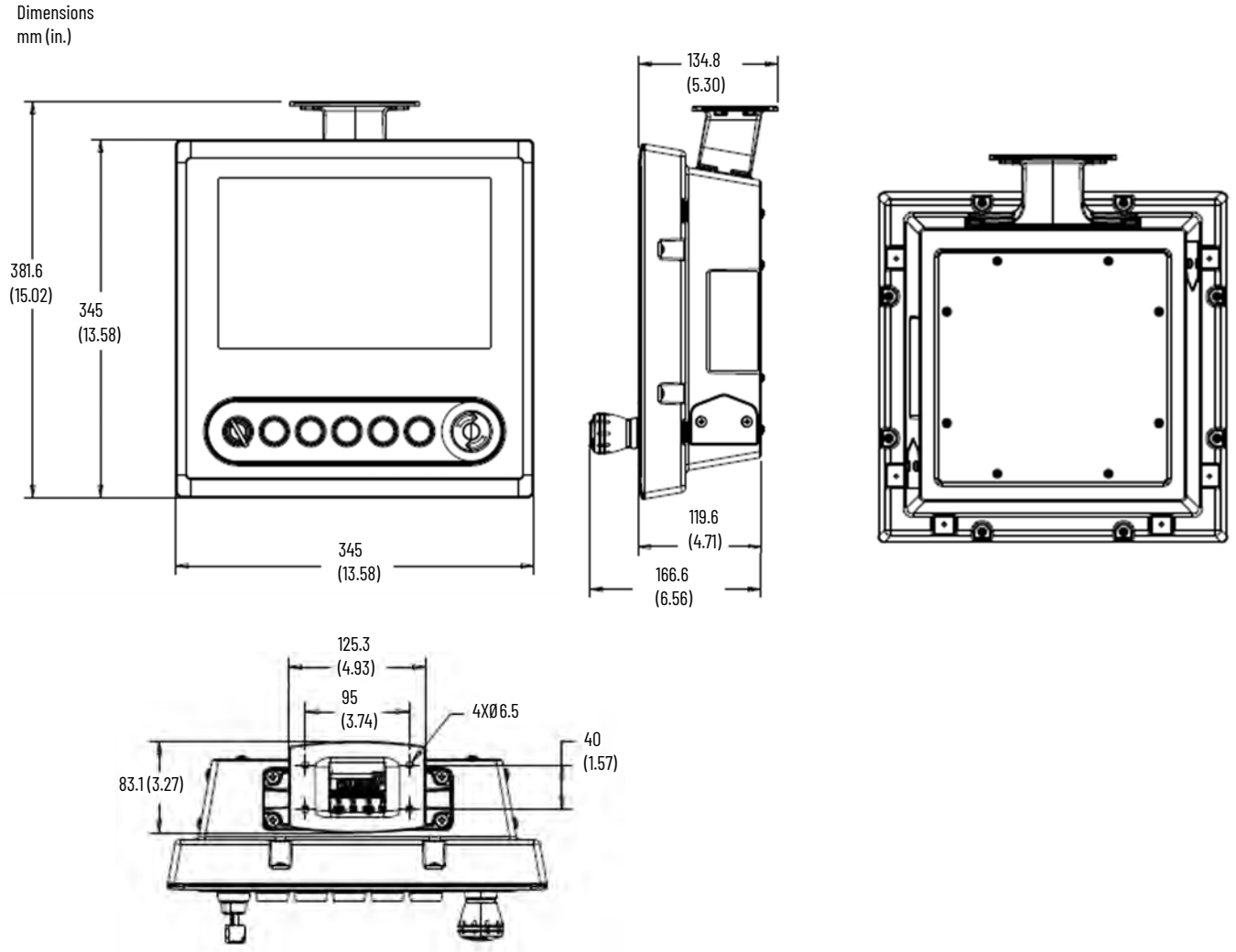

The ArmorView Plus 7 product is designed to be used with couplers that have the same mounting pattern, such as those shown in the table. For information about the dimensions of the arm mount adapter, see Arm Mount Adapter Dimensions on page 12.

	Rittal	Hoffman	Other
Supported Coupling	CP 6501.130 (CP40 120x65) CP 6206.340 (CP60 swivel) CP 6206.360 (CP60 rigid)	S1MFC	Any compatible coupling[1]
Supported Arm Systems	CP40 (steel) CP60 (extruded aluminum)	Syspend 180	
Supported Pedestal Systems	CP 6106.500 with these CP60 couplings: CP 6206.340 CP 6206.360	–	

(1) The arm mount adapter accommodates coupling with four M6 mounting screws 95 mm (3.74 in.) x 40 mm (1.58 in.) with a seal that is contained in 80.9 mm (3.19 in.) x 123.1 mm (4.85 in.). The product will only meet specified NEMA, UL Type, and IEC ratings with user-installed accessories (stack light, buttons, indicators, and so on), if the accessories have equivalent ratings and are installed properly.

Arm Mount Adapter Dimensions

Approximate Dimensions
mm (in.)

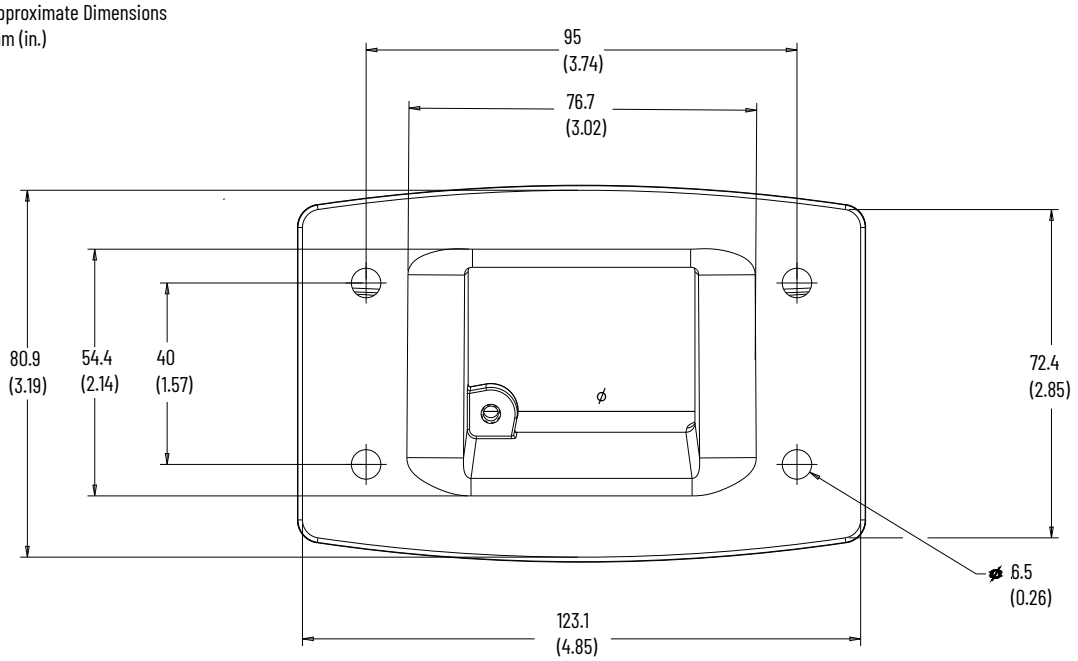

ArmorView Plus 7 Terminals Dimensions with VESA Mount and I/O Plate

Approximate Dimensions
mm (in.)

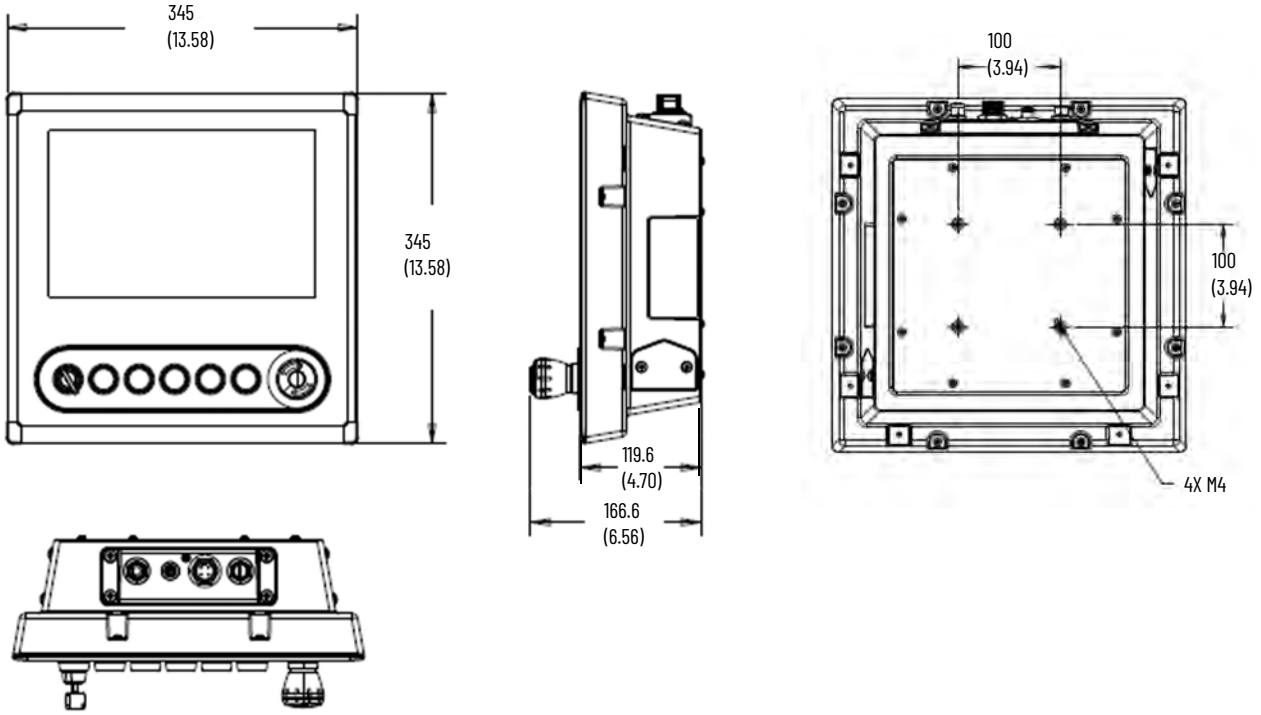

ArmorView Plus 7 Terminals Dimensions

ArmorView Plus 7 Terminals	Height mm (in.)	Width mm (in.)	Overall Depth without E-stop mm (in.)	Overall Depth with E-stop mm (in.)
With Arm Adapter	381.6 (15.02)	345 (13.58)	119.6 (4.71)	166.6 (6.56)
With VESA Mount and I/O Plate	345 (13.58)	345 (13.58)	119.6 (4.71)	166.6 (6.56)

Accessories

This section describes accessories for the PanelView Plus 7 Performance and ArmorView Plus 7 terminals.

Protective Overlays

Cat. No. (1)	Display Size	Operator Input		Quantity
		Touch	Key and Touch	
2711P-RGT7SP	6.5-in.	•		3
2711P-RGB7P			•	
2711P-RGT9SP	9-in. (wide)	•		
2711P-RGT10SP	10.4-in.	•		
2711P-RGB10P			•	
2711P-RGT12SP(2)	12.1-in. (wide)	•		
2711P-RGT15SP	15-in.	•		
2711P-RGB15P			•	
2711P-RGT19P	19-in.	•		

(1) The use of protective overlays may not be compatible in all hygienic applications. Consult the standards and protocols for your hygienic applications before you use a protective overlay on a stainless-steel terminal.
(2) On ArmorView Plus 7 terminals, the protective overlay covers only the touch screen portion of the product.

Power Supplies and Power Terminal Blocks

Cat. No.	Description	Quantity
1606-XLP95E	DIN rail power supply, 24...28V DC output voltage, 95 W	1
1606-XLP100E	DIN rail power supply, 24...28V DC output voltage, 100 W	1
2711P-RSACDIN	DIN rail power supply, AC-to-DC, 85...265V AC, 47...63 Hz	1
2711P-RTBAP	3-pin AC power terminal block	10
2711P-RTBDSP	3-pin DC power terminal block	10

Mounting Hardware

Cat. No.	Description	Quantity
2711P-RMCP(1)	Replacement mounting levers (black)	16
2711P-RTMC(2)	Replacement mounting clips (only for stainless-steel terminals)	8

(1) Catalog number 2711P-RMCP mounting levers are used with PanelView Plus 7 Performance terminals. Do not use gray mounting levers; they are not compatible with PanelView Plus 7 Performance terminals.
(2) Catalog number 2711P-RTMC mounting clips are used for stainless-steel terminals, catalog numbers 2711P-T9W22D9P-BSHK 2711P-T10C22D9P-BSHK, 2711P-T12W22D9P-BSHK, or 2711P-T15C22D9P-BSHK. **NOTE:** 2711P-T12W22D9P-BSHK requires 10 mounting clips and 2711P-T15C22D9P-BSHK requires 12 mounting clips. If you need more than eight clips, order two 2711P-RTMC mounting clip kits.

Secure Digital (SD) Cards(1)

Cat. No.	Description	Quantity
1784-SD1	1 GB SD card	1
1784-SD2	2 GB SD card	1
1784-SDHC8	8 GB High Capacity SD card	1
1784-SDHC32	32 GB High Capacity SD card	1
2711C-RCSD	USB to SD adapter for SD card	1

(1) To help reduce the chance of corruption when you use SD Cards or USB drives with the terminal, Rockwell Automation recommends that you use only the above SD card catalog numbers.

Battery Replacement

Cat. No.	Description	Quantity
2711P-RY2032	Lithium coin cell battery, CR2032 equivalent	1

IMPORTANT Before you select the appropriate replacement gasket, you must identify the series of your PanelView Plus 7 Performance Stainless Steel terminal. The terminal series information can be found on the product nameplate label.

The gaskets that are listed for use on Series B or Series C terminals are not certified for use on Series A terminals, and the gaskets that are listed for use on Series A terminals are not certified for use on Series B or Series C terminals.

Hygienic Gasket Replacement Kits for Stainless Steel Terminals

Cat. No.	Description[1]	Terminal Series	Quantity
2711P-RGST9W	Hygienic gasket, blue silicone For 9-in. Series A stainless-steel terminals	A	1
2711P-RGST12W	Hygienic gasket, blue silicone For 12-in. Series A stainless-steel terminals	A	1
2711P-RGST9WB	Hygienic gasket, blue, silicone, with ribs For 9-in. Series B and Series C stainless-steel terminals	B or C	1
2711P-RGST12WB	Hygienic gasket, blue, silicone, with ribs For 12-in. Series B and Series C stainless-steel terminals	B or C	1
2711P-RGST10	Hygienic gasket, blue, silicone, with ribs For 10-in. Series C stainless-steel terminals	C	1
2711P-RGST15	Hygienic gasket, blue, silicone, with ribs For 15-in. Series C stainless-steel terminals	C	1

(1) Gasket material is compliant with FDA 21 CFR 177.2600.

VESA Kit for ArmorView Plus 7 Terminals

Cat. No.	Description	Quantity
2711P-RVESA01	VESA access cover, I/O plate fitted with these cables: • Power to terminal • Connection to E-stop button • Ethernet (I/O Plate to Ethernet I/O Module) • Ethernet (I/O Plate to PanelView terminal)[1] • Ground wire • M16 hole plug[2]	1

(1) For units that don't have an Ethernet I/O module and require a DLR connection, you must remove the Ethernet I/O module cable and replace it with the Ethernet I/O module to terminal cable.
(2) For terminals that do not have an E-stop on the I/O plate, you can replace the connector with the M16 hole plug.

Handle Kit for ArmorView Plus 7 Terminals

Cat. No.	Description	Quantity
2711P-RHNDL01[1]	One-handle	1

(1) You can install one, two, or three handles to an ArmorView Plus 7 terminal. Indentations for installing the handle are located opposite the arm mount adapter (or the I/O plate), and on both sides. To install more than one handle, order multiple handle kits.

Stack Light for ArmorView Plus 7 Terminals

Cat. No.	Description	Quantity
854J-BVMC (vertical mount)[1]	Stack light	1

(1) You can install a stack light on either side of an ArmorView Plus 7 terminal. To install two stack lights, order two stack light kits.

Cables for ArmorView Plus 7 Terminals

Cat. No.	Description	Quantity
2711P-RIOIN3M	Input point cable for customer-installed switch (3-pin male Pico™ style connector for Ethernet I/O module)	1
2711P-RIOUT3M	Output point cable for customer-installed indicator light (3-pin male Pico style connector for Ethernet I/O module)	1

HMI Software

All PanelView Plus 7 terminals are configured with FactoryTalk View Studio software and have an integrated runtime system called FactoryTalk View Machine Edition Station.

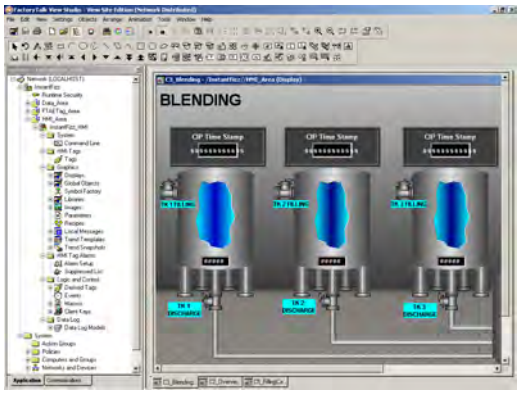

Machine Edition Station runs projects that are developed with FactoryTalk View Studio software and is included on all PanelView Plus 7 terminals.

Two versions of FactoryTalk View Studio software support application development for PanelView Plus 7 terminals.

Cat. No.(1)	Description
9701-VWSTMENE	FactoryTalk View Studio for Machine Edition software - Configuration software for developing and testing machine-level human machine interface (HMI) applications. Includes FactoryTalk Linx and KEPServer Enterprise software.
9701-VWSTENE	FactoryTalk View Studio software - Configuration software for developing and testing machine-level and supervisory-level human machine interface (HMI) applications.

(1) To order localized versions of the software, replace EN in the catalog number with DE for German, FR for French, JP for Japanese, or ZH for Chinese.

You can import PanelView Standard/PanelBuilder© 32 and PanelView applications into FactoryTalk View Studio software as Machine Edition applications by using the Machine Edition Import Wizard. The Import Wizard steps you through a few options such as scaling to a new screen resolution size, and then converts objects, text, tags, and communication configurations to ones that are available in Machine Edition.

FactoryTalk ViewPoint software, an Add-On to FactoryTalk View Studio software, allows plant managers, production supervisors, system integrators, and other key personnel to view and control real-time plant floor operations remotely from a web browser. FactoryTalk ViewPoint enabled displays are fully scalable and animated in the browser. You can also view displays that are not the active display of the terminal from a remote location.

Each PanelView Plus 7 terminal contains one license that supports one client connection to the terminal. No additional software is required.

For a complete list of available HMI software, visit https://www.rockwellautomation.com/en-us/products/software.html#hmi.

Additional Resources

These documents contain more information about related products from Rockwell Automation.

Resource	Description
PanelView Plus 7 Performance Terminals User Manual, publication 2711P-UM008	Provides instructions on how to install, configure, and operate the PanelView Plus 7 Performance terminals.
ArmorView Plus 7 Installation Instructions, publication 2711P-IN013	Provides instructions on how to install the ArmorView Plus 7 components.
Industrial Automation Wiring and Grounding Guidelines, publication 1770-4.1	Provides general guidelines on how to install a Rockwell Automation industrial system.
Product Certifications website, rok.auto/certifications.	Provides declarations of conformity, certificates, and other certification details.

You can view or download publications at rok.auto/literature.