MicroLogix 1200 Programmable Controllers

Bulletin 1762 Controllers and Expansion I/O Modules

Allen-Bradley
by ROCKWELL AUTOMATION

User Manual

Original Instructions

Important User Information

Read this document and the documents listed in the additional resources section about installation, configuration, and operation of this equipment before you install, configure, operate, or maintain this product. Users are required to familiarize themselves with installation and wiring instructions in addition to requirements of all applicable codes, laws, and standards.

Activities including installation, adjustments, putting into service, use, assembly, disassembly, and maintenance are required to be carried out by suitably trained personnel in accordance with applicable code of practice.

If this equipment is used in a manner not specified by the manufacturer, the protection provided by the equipment may be impaired.

In no event will Rockwell Automation, Inc. be responsible or liable for indirect or consequential damages resulting from the use or application of this equipment.

The examples and diagrams in this manual are included solely for illustrative purposes. Because of the many variables and requirements associated with any particular installation, Rockwell Automation, Inc. cannot assume responsibility or liability for actual use based on the examples and diagrams.

No patent liability is assumed by Rockwell Automation, Inc. with respect to use of information, circuits, equipment, or software described in this manual.

Reproduction of the contents of this manual, in whole or in part, without written permission of Rockwell Automation, Inc., is prohibited.

Throughout this manual, when necessary, we use notes to make you aware of safety considerations.

WARNING: Identifies information about practices or circumstances that can cause an explosion in a hazardous environment, which may lead to personal injury or death, property damage, or economic loss.

ATTENTION: Identifies information about practices or circumstances that can lead to personal injury or death, property damage, or economic loss. Attentions help you identify a hazard, avoid a hazard, and recognize the consequence.

IMPORTANT Identifies information that is critical for successful application and understanding of the product.

These labels may also be on or inside the equipment to provide specific precautions.

SHOCK HAZARD: Labels may be on or inside the equipment, for example, a drive or motor, to alert people that dangerous voltage may be present.

BURN HAZARD: Labels may be on or inside the equipment, for example, a drive or motor, to alert people that surfaces may reach dangerous temperatures.

ARC FLASH HAZARD: Labels may be on or inside the equipment, for example, a motor control center, to alert people to potential Arc Flash. Arc Flash will cause severe injury or death. Wear proper Personal Protective Equipment (PPE). Follow ALL Regulatory requirements for safe work practices and for Personal Protective Equipment (PPE).

The following icon may appear in the text of this document.

Identifies information that is useful and can help to make a process easier to do or easier to understand.

Preface

About This Publication . . . 7
Purpose of this Manual . . . 7
Download Firmware, AOP, EDS, and Other Files . . . 7
Summary of Changes . . . 7
Additional Resources . . . 7

Chapter 1

Hardware Features . . . 9
Component Descriptions . . . 10
- MicroLogix 1200 Memory Module and/or Real-time Clock . . . 10
- 1762 Expansion I/O Modules . . . 10

Communication Cables . . . 11
Programming . . . 11
Communication Options . . . 11

Chapter 2

Installation Considerations . . . 13
Safety Considerations . . . 13
- Hazardous Location Considerations . . . 13
- Disconnect Main Power . . . 14
- Safety Circuits . . . 14
- Power Distribution . . . 14
- Periodic Tests of Master Control Relay Circuit . . . 14

Power Considerations . . . 15
- Isolation Transformers . . . 15
- Power Supply Inrush . . . 15
- Loss of Power Source . . . 15
- Input States on Power Down . . . 15
- Other Types of Line Conditions . . . 15

Help Prevent Excessive Heat . . . 15
Master Control Relay . . . 16
- Emergency Stop Switches . . . 16

Install a Memory Module or Real-time Clock . . . 19
Controller Mounting Dimensions . . . 20
Controller and
Expansion I/O Spacing . . . 20
Mount the Controller . . . 20
- DIN Rail Mounting . . . 21
- Panel Mounting . . . 22

1762 Expansion I/O Module Dimensions . . . 23
Mount 1762 Expansion I/O . . . 23
- DIN Rail Mounting . . . 23
- Panel Mounting . . . 24

Connect Expansion I/O Modules . . . 24

Chapter 3

Wiring Requirements 27
Wiring Recommendation 27
Wire without Spade Lugs 28
Wire with Spade Lugs 28
Use Surge Suppressors 29
Recommended Surge Suppressors 30
Ground the Controller 30
Wiring Diagrams 31
Terminal Block Layouts 31
Terminal Groupings 33
Sinking and Sourcing Wiring Diagrams 34
1762-L24AWA, 1762-L24BWA, 1762-L24BXB, 1762-L24AWAR, 1762-L24BWAR and 1762-L24BXBR Wiring Diagrams 35
1762-L40AWA, 1762-L40BWA, 1762-L40BXB, 1762-L40AWAR, 1762-L40BWAR and 1762-L40BXBR Wiring Diagrams 37
Controller I/O Wiring 40
Minimize Electrical Noise 40
Expansion I/O Wiring 40
Discrete Wiring Diagrams 40
Analog Wiring 47

Chapter 4

Introduction 53
Supported Communication Protocols 53
Default Communication Configuration 53
Use the Communications Toggle Push Button 54
Connect to the RS-232 Port 54
Make a DF1 Point-to-Point Connection 55
Use a Modem 55
Isolated Modem Connection 56
Connect to a DH-485 Network 59
Recommended Tools 59
DH-485 Communication Cable 59
Connect the Communication Cable to the DH-485 Connector 60
Ground and Terminate the DH-485 Network 61
Connect the AIC+ 61
Cable Selection Guide 62
Recommended User-supplied Components 64
Safety Considerations 64
Install and Attach the AIC+ 64
Power the AIC+ 65

Chapter 5

Trimpot Operation 67
Trimpot Information Function File 67
Error Conditions 67

Chapter 6

Real-time Clock Operation 69
Removal/Insertion Under Power 69
Write Data to the Real-time Clock 69
RTC Battery Operation 70
Memory Module Operation 70
User Program and Data Back-up 70
Program Compare 70
Data File Download Protection 71
Memory Module Write Protection 71
Removal/Insertion Under Power 71

Appendix A

Controller Specifications 73
Expansion I/O Specifications 77
Discrete I/O Modules 77
Analog Modules 82

Appendix B

MicroLogix 1200 RTB Replacement Kit 87

Appendix C

Understand the Controller Status Indicators 89
Normal Operation 90
Error Conditions 90
Controller Error Recovery Model 91
Analog Expansion I/O Diagnostics and Troubleshooting 92
Module Operation and Channel Operation 92
Power-up Diagnostics 92
Critical and Non-critical Errors 92
Module Error Definition Table 92
Error Codes 93
Call Rockwell Automation for Assistance 94

Appendix D

Prepare for Firmware Update 95
Install ControlFLASH Software 95
Prepare the Controller for Firmware Update 95
Sequence of Operation 96
Missing or Corrupt OS LED Pattern 96

Appendix E

RS-232 Communication Interface 97
DF1 Full-duplex Protocol 97
DF1 Half-duplex Protocol 98
Use Modems with MicroLogix Programmable Controllers 99
DH-485 Communication Protocol 99

DH-485 Configuration Parameters 100
Devices that use the DH-485 Network 100
Important DH-485 Network Planning Considerations. 101
Example DH-485 Connections 103
Modbus Communication Protocol 104
ASCII 104

Appendix F

System Loading Calculations 105
System Loading Example Calculations (24-point Controller). 105
System Loading Example Calculations (40-point Controller) 106
System Loading Worksheet for 24-point Controllers 107
Current Loading. 108
System Loading Worksheet for 40-point Controllers 109
Current Loading. 109
Calculating Heat Dissipation 110

Glossary 113

Index 117

About This Publication

Use this manual if you are responsible for designing, installing, programming, or troubleshooting control systems that use MicroLogix™ 1200 controllers.

You should have a basic understanding of electrical circuitry and familiarity with relay logic. If you do not, obtain the proper training before using this product.

Rockwell Automation recognizes that some of the terms that are currently used in our industry and in this publication are not in alignment with the movement toward inclusive language in technology. We are proactively collaborating with industry peers to find alternatives to such terms and making changes to our products and content. Please excuse the use of such terms in our content while we implement these changes.

Purpose of this Manual

This manual is a reference guide for MicroLogix 1200 controllers and expansion I/O. It describes the procedures that you use to install, wire, and troubleshoot your controller. This manual:

- Explains how to install and wire your controllers
- Gives you an overview of the MicroLogix 1200 controller system

See MicroLogix 1200 and MicroLogix 1500 Programmable Controllers Instruction Set Reference Manual, publication 1762-RM001, for the MicroLogix 1200 and MicroLogix 1500 instruction set and for application examples to show the instruction set in use. See your RSLogix 500® programming software user documentation for more information on programming your MicroLogix 1200 controller.

Download Firmware, AOP, EDS, and Other Files

Download firmware, associated files (such as AOP, EDS, and DTM), and access product release notes from the Product Compatibility and Download Center at rok.auto/pcdc.

Summary of Changes

This publication contains the following new or updated information. This list includes substantive updates only and is not intended to reflect all changes.

Topic	Page
Updated template	throughout
Added inclusive language acknowledgment	7
Updated Input Specifications – 1762-IA8, 1762-IQ8, 1762-IQ16, 1762-IQ32T, 1762-IQ8OW6	77
Updated Output Specifications – 1762-OW8, 1762-OW16, 1762-OX6I, 1762-IQ8OW6	79
Updated Environmental Specifications	77, 81, 86
Updated Certifications	82, 86

Additional Resources

These documents contain additional information concerning related products from Rockwell Automation. You can view or download publications at rok.auto/literature.

Additional Resources

Resource	Description
MicroLogix 1200 and MicroLogix 1500 Programmable Controllers Instruction Set Reference Manual, publication 1762-RM001	Information on the MicroLogix 1200 and MicroLogix 1500 controllers instruction set.
AIC+ Advanced Interface Converter User Manual, publication 1761-UM004	A description on how to install and connect an AIC+. This manual also contains information on network wiring.
DeviceNet Interface User Manual, publication 1761-UM005	Information on how to install, configure, and commission a DeviceNet™ Interface (DNI).
DF1 Protocol and Command Set Reference Manual, publication 1770-6.5.16	Information on DF1 open protocol.
Modbus Protocol Specifications, available from www.modbus.org	Information about the Modbus protocol.
EtherNet/IP Network Devices User Manual, publication ENET-UM006	Describes how to configure and use EtherNet/IP™ devices to communicate on the EtherNet/IP network.
Ethernet Reference Manual, publication ENET-RM002	Describes basic Ethernet concepts, infrastructure components, and infrastructure features.

Additional Resources (Continued)

Resource	Description
System Security Design Guidelines Reference Manual, publication SECURE-RM001	Provides guidance on how to conduct security assessments, implement Rockwell Automation products in a secure system, harden the control system, manage user access, and dispose of equipment.
UL Standards Listing for Industrial Control Products, publication CMPNTS-SR002	Assists original equipment manufacturers (OEMs) with construction of panels, to help ensure that they conform to the requirements of Underwriters Laboratories.
Industrial Components Preventive Maintenance, Enclosures, and Contact Ratings Specifications, publication IC-TD002	Provides a quick reference tool for Allen-Bradley industrial automation controls and assemblies.
Safety Guidelines for the Application, Installation, and Maintenance of Solid-state Control, publication SGI-1.1	Designed to harmonize with NEMA Standards Publication No. ICS 1.1-1987 and provides general guidelines for the application, installation, and maintenance of solid-state control in the form of individual devices or packaged assemblies incorporating solid-state components.
Industrial Automation Wiring and Grounding Guidelines, publication 1770-4.1	Provides general guidelines for installing a Rockwell Automation industrial system.
Product Certifications website, rok.auto/certifications	Provides declarations of conformity, certificates, and other certification details.

Hardware Overview

Hardware Features

The MicroLogix 1200 programmable controller contains a power supply, input and output circuits, and a processor. The controller is available in 24 I/O points and 40 I/O points configurations.

Figure 1 - Controller Hardware Features

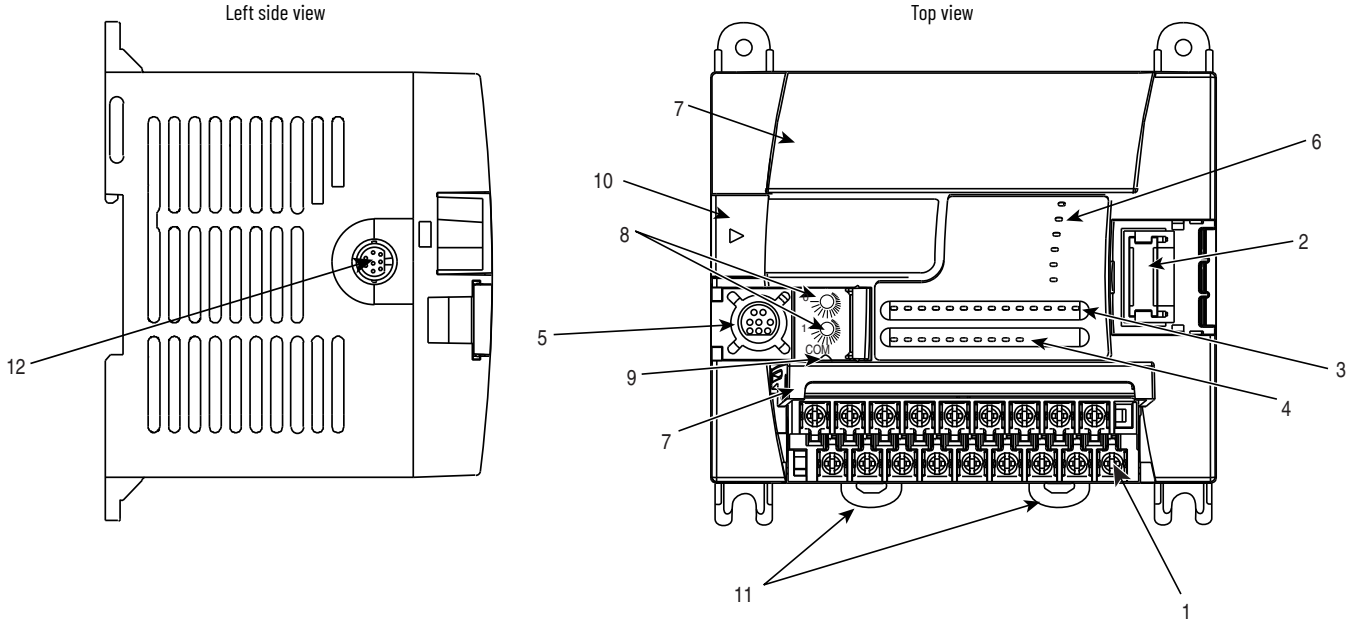

Controller Description

	Description		Description
1	Terminal blocks (Removable terminal blocks on 40-point controllers only)	7	Terminal doors and labels
2	Bus connector interface to expansion I/O	8	Trimpots
3	Input LEDs	9	Communications Toggle push button
4	Output LEDs	10	Memory module port cover(1) or memory module and/or real-time clock(2)
5	Communication port/Channel 0	11	DIN rail latches
6	Status LEDs	12	Programmer/HMI port (Equipped with 1762-LxxxxxR controllers only)

(1) Shipped with controller
(2) Optional equipment

Controller Input Power and Embedded I/O

Catalog Number	Description		
	Input Power	Inputs	Outputs
1762-L24AWA, 1762-L24AWAR	120/240V AC	14 120V AC	10 relay
1762-L24BWA, 1762-L24BWAR	120/240V AC	10 24V DC 4 fast 24V DC	10 relay
1762-L24BXB, 1762-L24BXBR	24V DC	10 24V DC 4 fast 24V DC	5 relay, 4 24V DC FET 1 high-speed 24V DC FET

Controller Input Power and Embedded I/O (Continued)

Catalog Number	Description		
	Input Power	Inputs	Outputs
1762-L40AWA, 1762-L40AWAR	120/240V AC	24 120V AC	16 relay
1762-L40BWA, 1762-L40BWAR	120/240V AC	20 24V DC 4 fast 24V DC	16 relay
1762-L40BXB, 1762-L40BXBR	24V DC	20 24V DC 4 fast 24V DC	8 relay, 7 24V DC FET 1 high-speed 24V DC FET

Component Descriptions

MicroLogix 1200 Memory Module and/or Real-time Clock

The controller is shipped with a memory module port cover in place. You can order a memory module, real-time clock, or memory module and real-time clock as an accessory.

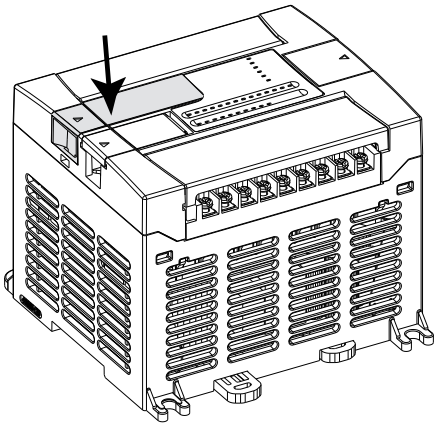

Memory Module and/or Real-time Clock

Catalog Number	Description
1762-MM1	Memory module only
1762-RTC	Real-time clock only
1762-MM1RTC	Memory module and real-time clock

1762 Expansion I/O Modules

1762 expansion I/O modules can be connected to the MicroLogix 1200 controller, as shown in Figure 2.

A maximum of six I/O modules, in certain combinations, may be connected to a controller. See System Loading and Heat Dissipation on page 105 to determine valid combinations.

Figure 2 - 1762 Expansion I/O Modules

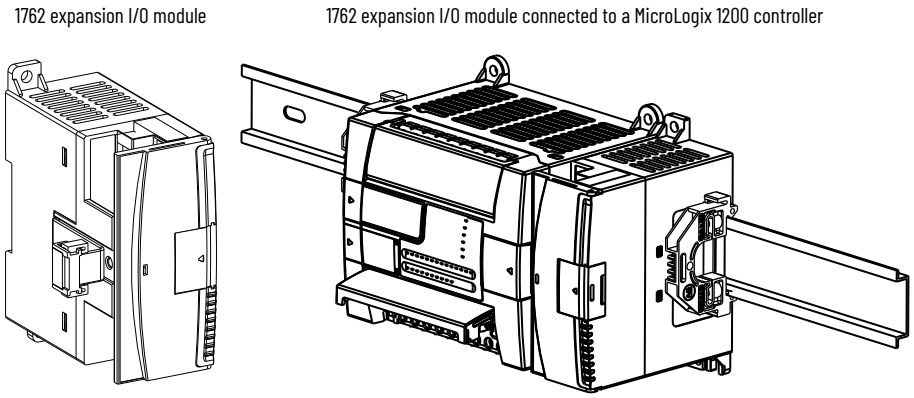

Expansion I/O Modules

Catalog Number	Description
Digital	
1762-IA8	8-point 120V AC input module
1762-IQ8	8-point sinking/sourcing 24V DC input module
1762-IQ16	16-point sinking/sourcing 24V DC input module
1762-IQ32T	32-point sinking/sourcing 24V DC input module
1762-OA8	8-point 120/240V AC Triac output module
1762-OB8	8-point sourcing 24V DC output module
1762-OB16	16-point sourcing 24V DC output module
1762-OB32T	32-point sourcing 24V DC output module
1762-OV32T	32-point sinking 24V DC output module
1762-OW8	8-point AC/DC relay output module
1762-OW16	16-point AC/DC relay output module
1762-OX6I	6-point isolated AC/DC relay output module
1762-IQ8OW6	8-point sinking/sourcing 24V DC input and 6-point AC/DC relay output module
Analog	
1762-IF4	4-channel voltage/current analog input module
1762-OF4	4-channel voltage/current analog output module
1762-IF2OF2	Combination 2-channel input 2-channel output voltage/current analog module
Temperature	
1762-IR4	4-channel RTD/resistance input module
1762-IT4	4-channel thermocouple/mV input module

Communication Cables

Use only the following communication cables with the MicroLogix 1200 controllers:

- 1761-CBL-PM02, series C or later
- 1761-CBL-HM02, series C or later
- 1761-CBL-AM00, series C or later
- 1761-CBL-AP00, series C or later
- 1761-CBL-PH02, series A or later
- 1761-CBL-AH02, series A or later
- 2707-NC8, series A or later
- 2702-NC9, series B or later
- 2707-NC10, series B or later
- 2707-NC11, series B or later

Programming

Program the MicroLogix 1200 controller using RSLogix 500 software, version 4.00.00 or later. To use the new features of the series B MicroLogix 1200 controllers, including the full ASCII instruction set, you must use RSLogix 500 software, version 4.50.00 or later. Communication cables for programming are available separately from the controller and software.

Communication Options

The MicroLogix 1200 can be connected to a personal computer. It can also be connected to a DH-485 network, or a Modbus network as an RTU master or RTU slave with an Advanced Interface Converter (1761-NET-AIC). The controller can also be connected to DF1 Half-duplex networks as an RTU master or RTU slave. Series B controllers may also be connected to serial devices using ASCII.

See Communication Connections on page 53 for more information on connecting to the available communication options.

The 1762-LxxxxxR controllers provide an additional communication port called the Programmer/HMI Port. This port supports DF1 Full-duplex protocol only. The controller cannot

initiate messages through this port. It can only respond to messages sent to it. All communication parameters are fixed and cannot be changed by a user.

See Default Communication Configuration on page 53 for the configuration settings.

Install Your Controller

Installation Considerations

Most applications require installation in an industrial enclosure (Pollution Degree 2[a]) to reduce the effects of electrical interference (Over Voltage Category II[b]) and environmental exposure. Locate your controller as far as possible from power lines, load lines, and other sources of electrical noise such as hard-contact switches, relays, and AC motor drives. For more information on proper grounding guidelines, see the Industrial Automation Wiring and Grounding Guidelines, publication 1770-4.1.

ATTENTION: Electrostatic discharge can damage semiconductor devices inside the controller. Do not touch the connector pins or other sensitive areas.

ATTENTION: Vertical mounting of the controller is not recommended due to heat build-up considerations.

ATTENTION: Be careful of metal chips when drilling mounting holes for your controller or other equipment within the enclosure or panel. Drilled fragments that fall into the controller or I/O modules could cause damage. Do not drill holes above a mounted controller if the protective debris shields are removed or the processor is installed.

Safety Considerations

Safety considerations are an important element of proper system installation. Actively thinking about the safety of yourself and others, as well as the condition of your equipment, is of primary importance. We recommend reviewing the following safety considerations.

Hazardous Location Considerations

This equipment is suitable for use in Class I Division 2, Groups A, B, C, D or non-hazardous locations only. The following WARNING statement applies to use in hazardous locations.

WARNING: EXPLOSION HAZARD

- Substitution of components may impair suitability for Class I Division 2.
- Do not replace components or disconnect equipment unless power has been switched off.
- Do not connect or disconnect components unless power has been switched off.
- This product must be installed in an enclosure. All cables connected to the product must remain in the enclosure or be protected by conduit or other means.
- All wiring must comply with N.E.C. article 501-4(b).
- The interior of the enclosure must be accessible only by the use of a tool.
- For applicable equipment (for example, relay modules), exposure to some chemicals may degrade the sealing properties of the materials used in these devices:
  – Relays, epoxy
  It is recommended that you periodically inspect these devices for any degradation of properties and replace the module if degradation is found.

(a) Pollution Degree 2 is an environment where normally only non-conductive pollution occurs except that occasionally temporary conductivity caused by condensation shall be expected.
(b) Overvoltage Category II is the load level section of the electrical distribution system. At this level, transient voltages are controlled and do not exceed the impulse voltage capability of the products insulation.

Use only the communication cables that are listed in Table 1 in Class I Division 2 hazardous locations.

Table 1 - Communication Cables for Class I Division 2 Hazardous Locations

Catalog Number	Catalog Number
1761-CBL-PM02, series C or later	2707-NC8, series A or later
1761-CBL-HM02, series C or later	2707-NC9, series B or later
1761-CBL-AM00, series C or later	2707-NC10, series B or later
1761-CBL-AP00, series C or later	2707-NC11, series B or later
1761-CBL-PH02, series A or later	–
1761-CBL-AH02, series A or later	–

Disconnect Main Power

WARNING: EXPLOSION HAZARD
Do not replace components or disconnect equipment unless power has been switched off.

The main power disconnect switch should be located where operators and maintenance personnel have quick and easy access to it. In addition to disconnecting electrical power, all other sources of power (pneumatic and hydraulic) should be de-energized before working on a machine or process that is controlled by a controller.

Safety Circuits

WARNING: EXPLOSION HAZARD
Do not connect or disconnect connectors while circuit is live.

Circuits installed on the machine for safety reasons, like overtravel limit switches, stop push buttons, and interlocks, should always be hard-wired directly to the master control relay. These devices must be wired in series so that when any one device opens, the master control relay is de-energized, which removes power to the machine. Never alter these circuits to defeat their function. Serious injury or machine damage could result.

Power Distribution

There are some points about power distribution that you should know:

- The master control relay must be able to inhibit all machine motion by removing power to the machine I/O devices when the relay is de-energized. It is recommended that the controller remain powered even when the master control relay is de-energized.
- If you are using a DC power supply, interrupt the load side rather than the AC line power. This avoids the additional delay of power supply turn-off. The DC power supply should be powered directly from the fused secondary of the transformer. Power to the DC input and output circuits should be connected through a set of master control relay contacts.

Periodic Tests of Master Control Relay Circuit

Any part can fail, including the switches in a master control relay circuit. The failure of one of these switches would most likely cause an open circuit, which is a safe power-off failure. However, if one of these switches shorts out, it no longer provides any safety protection. These switches should be tested periodically to assure they will stop machine motion when needed.

Power Considerations

The following explains power considerations for the micro controllers.

Isolation Transformers

Consider using an isolation transformer in the AC line to the controller. This type of transformer provides isolation from your power distribution system to reduce the electrical noise that enters the controller and is often used as a step-down transformer to reduce line voltage. Any transformer that is used with the controller must have a sufficient power rating for its load. The power rating is expressed in voltamperes (VA).

Power Supply Inrush

During power-up, the MicroLogix 1200 power supply allows a brief inrush current to charge internal capacitors. Many power lines and control transformers can supply inrush current for a brief time. If the power source cannot supply this inrush current, the source voltage could sag momentarily.

The only effect of limited inrush current and voltage sag on the MicroLogix 1200 controller is that the power supply capacitors charge more slowly. However, consider the effect of a voltage sag on other equipment. For example, a deep voltage sag could reset a computer that is connected to the same power source. The following considerations determine whether the power source is required to supply high inrush current:

- The power-up sequence of devices in a system
- The amount of the power source voltage sag if the inrush current cannot be supplied
- The effect of voltage sag on other equipment in the system

If the entire system is powered-up simultaneously, a brief sag in the power source voltage typically does not affect any equipment.

Loss of Power Source

The power supply is designed to withstand brief power losses without affecting the operation of the system. The time that the system is operational during power loss is called program scan hold-up time after loss of power. The duration of the power supply hold-up time depends on the type and state of the I/O, but is typically between 10 milliseconds and 3 seconds. When the duration of power loss reaches this limit, the power supply signals the processor that it can no longer provide adequate DC power to the system. This is referred to as a power supply shutdown. The processor then performs an orderly shutdown of the controller.

Input States on Power Down

The power supply hold-up time that is described previously is longer than the turn-on and turn-off times of the inputs. Because of this, the input state change from On to Off that occurs when power is removed could be recorded by the processor before the power supply shuts down the system. Understanding this concept is important. The user program should be written to take this effect into account.

Other Types of Line Conditions

Occasionally the power source to the system can be temporarily interrupted. It is also possible that the voltage level drops substantially below the normal line voltage range for a period of time. Both of these conditions are considered to be a loss of power for the system.

Help Prevent Excessive Heat

For most applications, normal convective cooling keeps the controller within the specified operating range. Confirm that the specified temperature range is maintained. Proper spacing of components within an enclosure is usually sufficient for heat dissipation.

In some applications, a substantial amount of heat is produced by other equipment inside or outside the enclosure. In this case, place blower fans inside the enclosure to help with air circulation and to reduce hot spots near the controller.

Additional cooling provisions might be necessary when high ambient temperatures are encountered.

Do not bring in unfiltered outside air. Place the controller in an enclosure to protect it from a corrosive atmosphere. Harmful contaminants or dirt could cause improper operation or damage to components. In extreme cases, you can use air conditioning to protect against heat build-up within the enclosure.

Master Control Relay

A hard-wired master control relay (MCR) provides a reliable means for emergency machine shutdown. Since the master control relay allows the placement of several emergency stop switches in different locations, its installation is important from a safety standpoint. Overtravel limit switches or mushroom-head push buttons are wired in series so that when any of them opens, the master control relay is de-energized. This removes power to input and output device circuits. See Figure 3 and Figure 4.

ATTENTION: Never alter these circuits to defeat their function since serious injury and/or machine damage could result.

If you are using an external DC power supply, interrupt the DC output side rather than the AC line side of the supply to avoid the additional delay of power supply turn-off.

The AC line of the DC output power supply should be fused.

Connect a set of master control relays in series with the DC power supplying the input and output circuits.

Place the main power disconnect switch where operators and maintenance personnel have quick and easy access to it. If you mount a disconnect switch inside the controller enclosure, place the switch operating handle on the outside of the enclosure, so that you can disconnect power without opening the enclosure.

Whenever any of the emergency stop switches are opened, power to input and output devices should be removed.

When you use the master control relay to remove power from the external I/O circuits, power continues to be provided to the controller's power supply so that diagnostic indicators on the processor can still be observed.

The master control relay is not a substitute for a disconnect to the controller. It is intended for any situation where the operator must quickly de-energize I/O devices only. When inspecting or installing terminal connections, replacing output fuses, or working on equipment within the enclosure, use the disconnect to shut off power to the rest of the system.

Do not control the master control relay with the controller. Provide the operator with the safety of a direct connection between an emergency stop switch and the master control relay.

Emergency Stop Switches

When using emergency stop switches, adhere to the following points:

- Do not program emergency stop switches in the controller program. Any emergency stop switch should turn off all machine power by turning off the master control relay.
- Observe all applicable local codes concerning the placement and labeling of emergency stop switches.

- Install emergency stop switches and the master control relay in your system. Verify that relay contacts have a sufficient rating for your application. Emergency stop switches must be easy to reach.
- In the following illustration, input and output circuits are shown with MCR protection. However, in most applications, only output circuits require MCR protection.

Figure 3 and Figure 4 show the master control relay wired in a grounded system.

In most applications input circuits do not require MCR protection; however, if you must remove power from all field devices, you must include MCR contacts in series with input power wiring.

Figure 3 - Schematic (Using IEC Symbols)

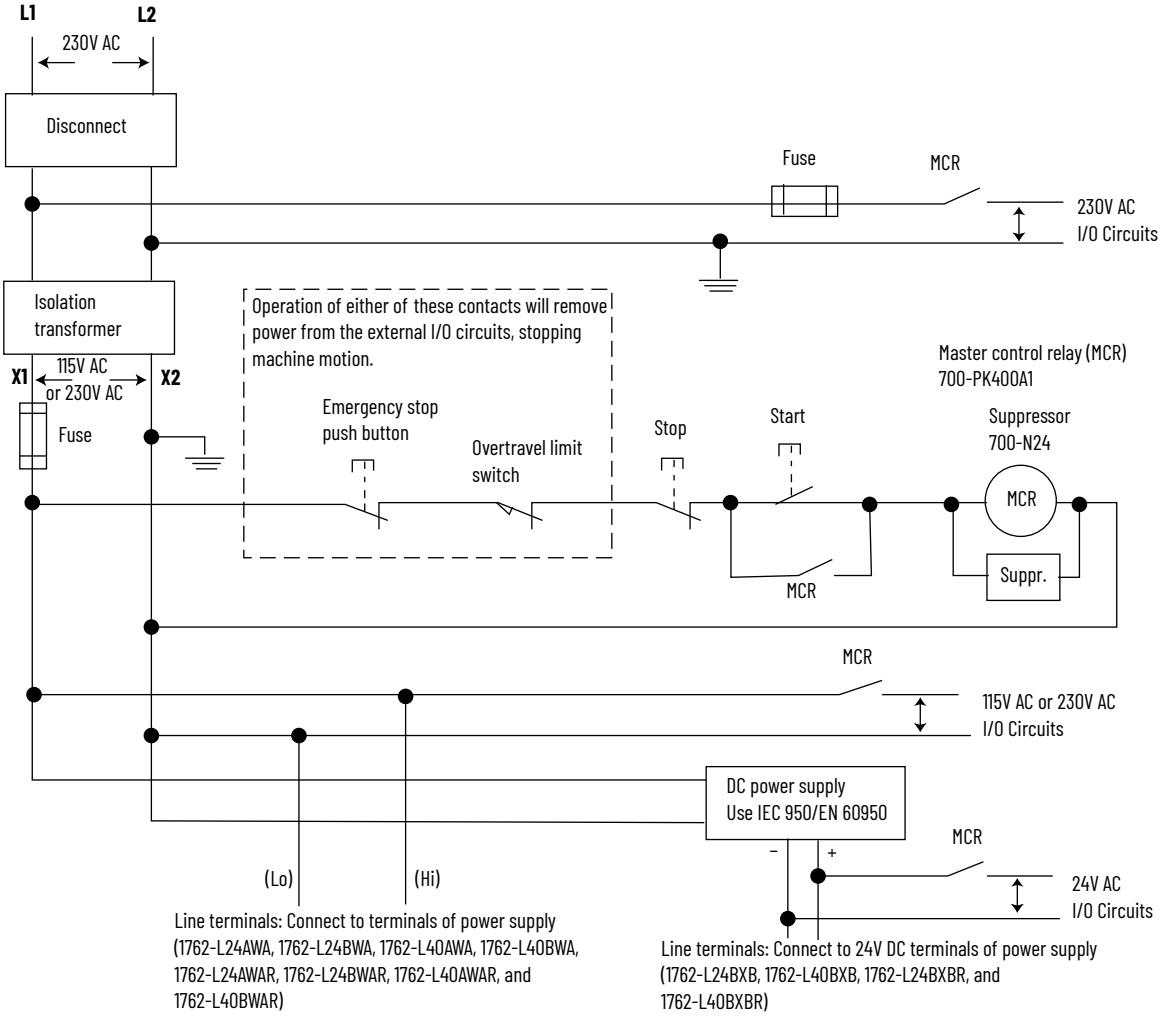

Figure 4 - Schematic (Using ANSI/CSA Symbols)

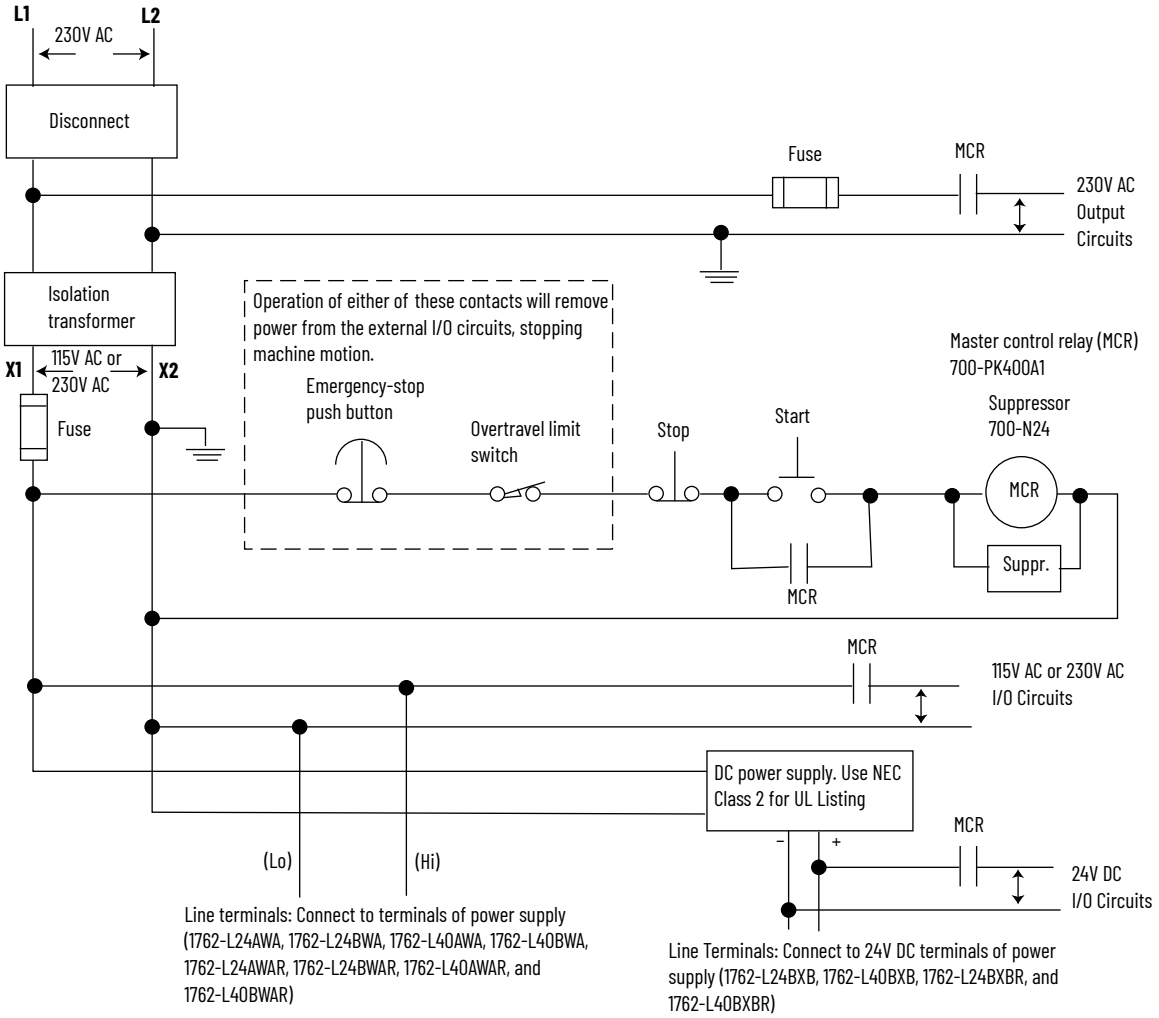

Install a Memory Module or Real-time Clock

To install a memory module, do as follows:

1. Remove the memory module port cover.

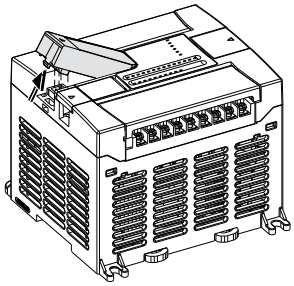

2. Align the connector on the memory module with the connector pins on the controller.

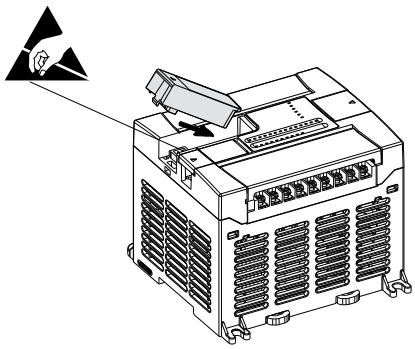

3. Firmly seat the memory module into the controller.

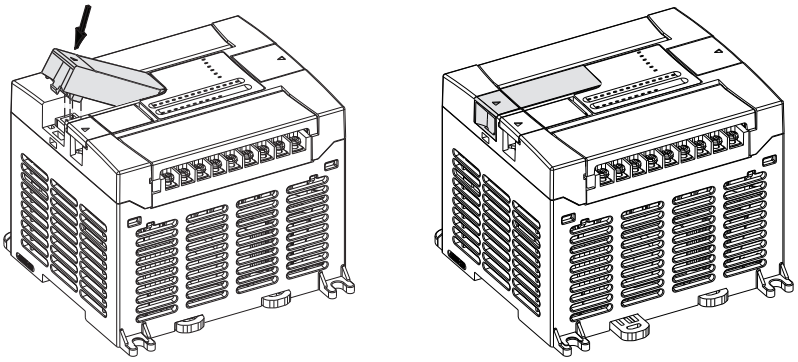

Controller Mounting Dimensions

Figure 5 - Controller Dimensions

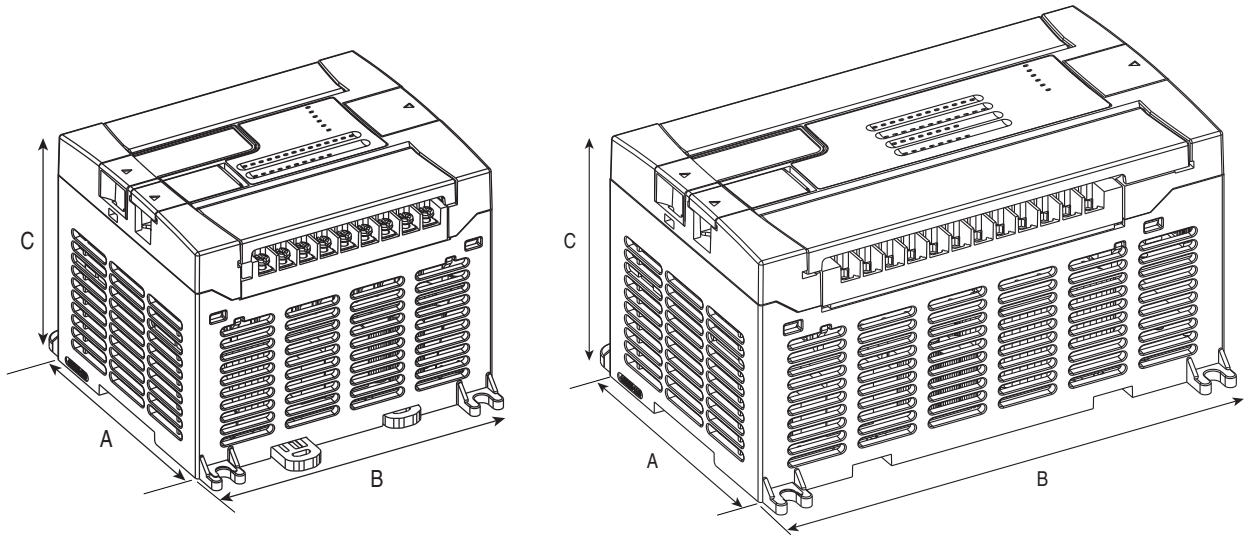

1762-L24AWA, 1762-L24BWA, 1762-L24BXB
1762-L24AWAR, 1762-L24BWAR, 1762-L24BXBR

1762-L40AWA, 1762-L40BWA, 1762-L40BXB
1762-L40AWAR, 1762-L40BWAR, 1762-L40BXBR

Dimension	1762-L24AWA 1762-L24AWAR	1762-L24BWA 1762-L24BWAR	1762-L24BXB 1762-L24BXBR	1762-L40AWA 1762-L40AWAR	1762-L40BWA 1762-L40BWAR	1762-L40BXB 1762-L40BXBR
A	90 mm (3.5 in.)			90 mm (3.5 in.)		
B	110 mm (4.33 in.)			160 mm (6.30 in.)		
C	87 mm (3.43 in.)			87 mm (3.43 in.)		

Controller and Expansion I/O Spacing

The controller mounts horizontally, with the expansion I/O extending to the right of the controller. Allow 50 mm (2 in.) of space on all sides of the controller system for adequate ventilation. Maintain spacing from enclosure walls, wireways, and adjacent equipment, as shown in Figure 6.

Figure 6 - Controller and Expansion I/O Spacing

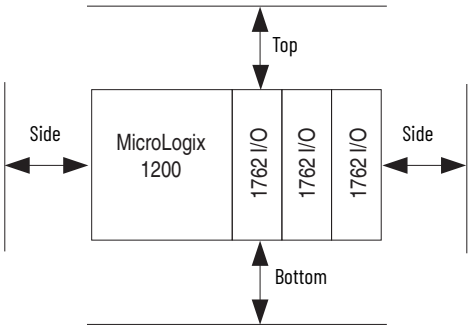

Mount the Controller

MicroLogix 1200 controllers are suitable for use in an industrial environment when installed in accordance with these instructions. Specifically, this equipment is intended for use in clean, dry environments (Pollution degree 2[(a)]) and to circuits not exceeding Over Voltage Category II[(b)] (IEC 60664-1)[(c)].

(a) Pollution Degree 2 is an environment where, normally, only non-conductive pollution occurs except that occasionally a temporary conductivity caused by condensation shall be expected.
(b) Over Voltage Category II is the load level section of the electrical distribution system. At this level transient voltages are controlled and do not exceed the impulse voltage capability of the product's insulation.
(c) Pollution Degree 2 and Over Voltage Category II are International Electrotechnical Commission (IEC) designations.

ATTENTION: Do not remove the protective debris shield until after the controller and all other equipment in the panel near the controller are mounted and wiring is complete. Once wiring is complete, remove protective debris shield. Failure to remove shield before operating can cause overheating.

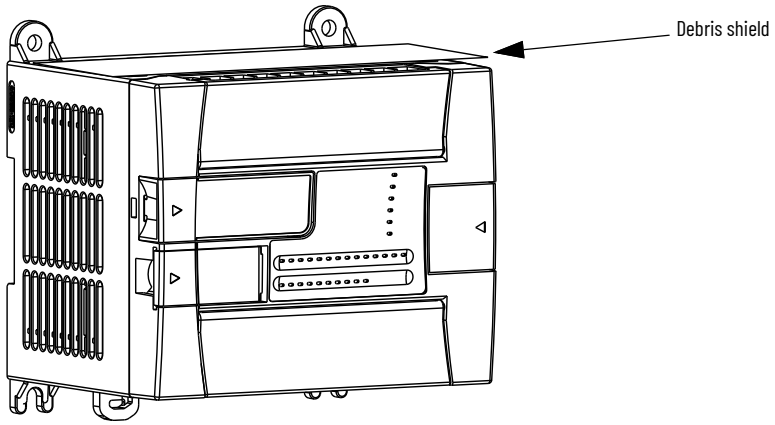

ATTENTION: Electrostatic discharge can damage semiconductor devices inside the controller. Do not touch the connector pins or other sensitive areas.

For environments with greater vibration and shock concerns, use the panel mounting method described on Panel Mounting on page 22, rather than DIN rail mounting.

DIN Rail Mounting

The maximum extension of the latch is 14 mm (0.55 in.) in the open position. A flat-blade screwdriver is required for removal of the controller. The controller can be mounted to EN 50022 - 35 x 7.5 or EN 50022 - 35 x 15 DIN rails. DIN rail mounting dimensions are shown in Figure 7.

Figure 7 - DIN Rail Mounting Dimensions

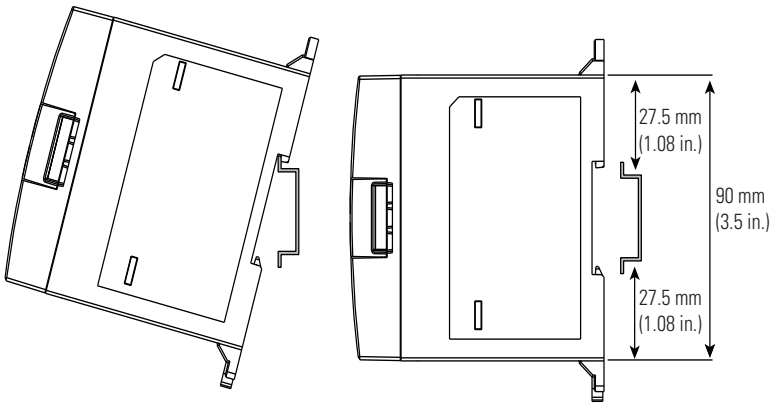

To install your controller on the DIN rail, do as follows:

1. Mount your DIN rail. Make sure that the placement of the controller on the DIN rail meets the recommended spacing requirements, see Controller and Expansion I/O Spacing on page 20.
2. Close the DIN latch, if it is open.
3. Hook the top slot over the DIN rail.

4. While pressing the controller down against the top of the rail, snap the bottom of the controller into position.
5. Leave the protective debris shield attached until you are finished wiring the controller and any other devices.

To remove your controller from the DIN rail:

1. Place a flat-blade screwdriver in the DIN rail latch at the bottom of the controller.
2. Holding the controller, pry downward on the latch until the latch locks in the open position.
3. Repeat steps 1 and 2 for the second DIN rail latch.
4. Unhook the top of the DIN rail slot from the rail.

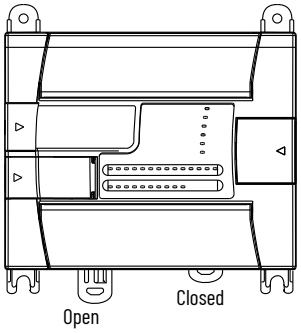

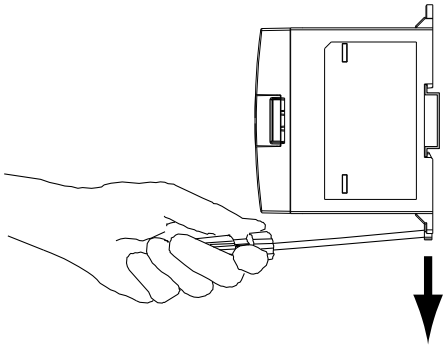

Panel Mounting

Mount to panel using #8 or M4 screws. To install your controller using mounting screws:

1. Secure the template to the mounting surface. Make sure your controller is spaced properly. See Controller and Expansion I/O Spacing on page 20.
2. Drill holes through the template.
3. Remove the mounting template.
4. Mount the controller.
5. Leave the protective debris shield in place until you are finished wiring the controller and any other devices.

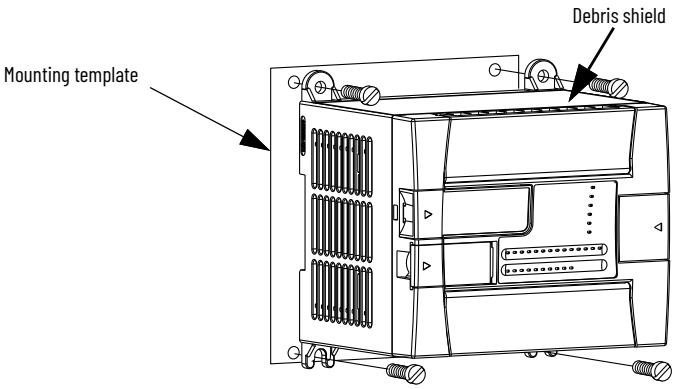

1762 Expansion I/O Module Dimensions

Figure 8 - 1762 Expansion I/O Module Dimensions

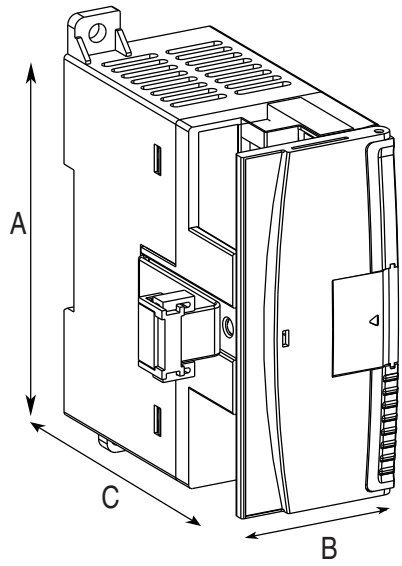

Dimension	Expansion I/O Module
A	90 mm (3.5 in.)
B	40 mm (1.57 in.)
C	87 mm (3.43 in.)

Mount 1762 Expansion I/O

ATTENTION: During panel or DIN rail mounting of all devices, be sure that all debris such as metal chips and wire stands, is kept from falling into the module. Debris that falls into the module could cause damage when the module is under power.

DIN Rail Mounting

The module can be mounted using the following DIN rails:

- 35 x 7.5 mm (EN 50022 - 35 x 7.5)
- 35 x 15 mm (EN 50022 - 35 x 15)

Before mounting the module on a DIN rail, close the DIN rail latch. Press the DIN rail mounting area of the module against the DIN rail. The latch momentarily opens and locks into place.

Use DIN rail end anchors (Allen-Bradley part number 1492-EA35 or 1492-EAH35) for vibration or shock environments. Figure 9 shows the location of the end anchors.

Figure 9 - Location of End Achors

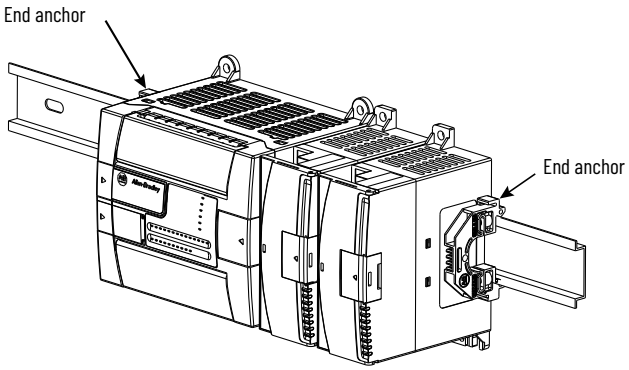

1762 expansion I/O modules must be mounted horizontally as illustrated.

For environments with greater vibration and shock concerns, use the panel mounting method described below, instead of DIN rail mounting.

Panel Mounting

Use the dimensional template shown in Figure 10 to mount the module. The preferred mounting method is to use two M4 or #8 panhead screws per module. Mounting screws are required on every module.

Figure 10 - Dimensional Template

For more than 2 modules: (number of modules - 1) x 40 mm (1.58 in.)

A = 95.86mm (3.774 in.)
1762-L24AWA, 1762-L24BWA, 1762-L24BXB
1762-L24AWAR, 1762-L24BWAR, 1762-L24BXBR
B = 145.8 mm (5.739 in.)
1762-L40AWA, 1762-L40BWA, 1762-L40BXB
1762-L40AWAR, 1762-L40BWAR, 1762-L40BXBR

All dimensions are in mm (inches).
Hole spacing tolerance: ±0.4 mm (0.016 in.).

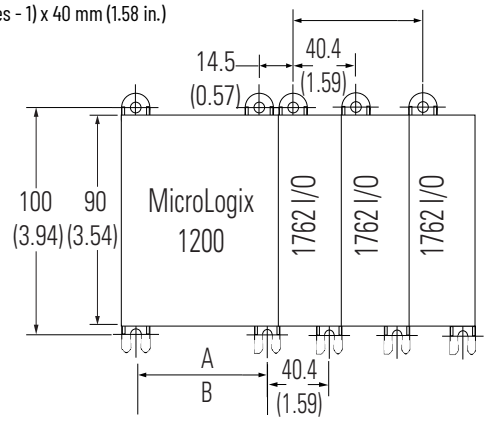

Connect Expansion I/O Modules

The expansion I/O module is attached to the controller or another I/O module by means of a flat ribbon cable after mounting, as shown in Figure 11.

Figure 11 - Attach Expansion I/O Modules

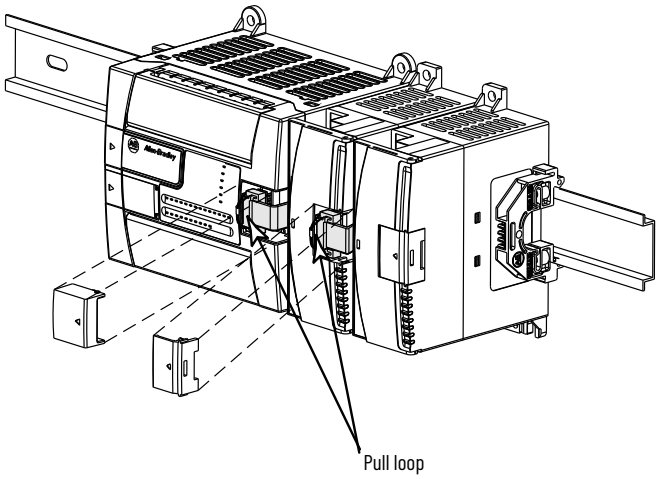

Use the pull loop on the connector to disconnect modules. Do not pull on the ribbon cable.

You can connect up to six expansion I/O modules to a controller depending upon the power supply loading.

ATTENTION: Remove power before removing or inserting an I/O module. When you remove or insert a module with power applied, an electric arc may occur. An electric arc can cause personal injury or property damage by:

- Sending an erroneous signal to your system's field devices, causing the controller to fault
- Causing an explosion in a hazardous environment

Electrical arcing causes excessive wear to contacts on both the module and its mating connector. Worn contacts may create electrical resistance, reducing product reliability.

WARNING: EXPLOSION HAZARD

In Class I Division 2 applications, the bus connector must be fully seated and the bus connector cover must be snapped in place.

In Class I Division 2 applications, all modules must be mounted in direct contact with each other as shown in Connect Expansion I/O Modules on page 24. If DIN rail mounting is used, an end stop must be installed ahead of the controller and after the last 1762 I/O module.

Notes:

Wire Your Controller

Wiring Requirements

Wiring Recommendation

ATTENTION: Before you install and wire any device, disconnect power to the controller system.

ATTENTION: Calculate the maximum possible current in each power and common wire. Observe all electrical codes dictating the maximum current allowable for each wire size. Current above the maximum ratings may cause wiring to overheat, which can cause damage.
United States Only: If the controller is installed within a potentially hazardous environment, all wiring must comply with the requirements stated in the National Electrical Code 501-4 (b).

- Allow for at least 50 mm (2 in.) between I/O wiring ducts or terminal strips and the controller.
- Route incoming power to the controller by a path separate from the device wiring. Where paths must cross, their intersection should be perpendicular.

Do not run signal or communication wiring and power wiring in the same conduit. Wires with different signal characteristics should be routed by separate paths.

- Separate wiring by signal type. Bundle wiring with similar electrical characteristics together.
- Separate input wiring from output wiring.
- Label wiring to all devices in the system. Use tape, shrink-tubing, or other dependable means for labeling purposes. In addition to labeling, use colored insulation to identify wiring based on signal characteristics. For example, you may use blue for DC wiring and red for AC wiring.

Table 2 - Wire Requirements

Wire Type		Wire Size (2 wire maximum per terminal screw)(1)
Solid	Cu-90 °C (194 °F)	0.34...2.5 mm^2 (14...22 AWG)
Stranded	Cu-90 °C (194 °F)	1.5...2.5 mm^2 (16...22 AWG)

(1) Wiring torque = 0.791 N•m (7 lb•in) rated

Wire without Spade Lugs

When wiring without spade lugs, we recommend that you keep the finger-safe covers in place. Loosen the terminal screw and route the wires through the opening in the finger-safe cover. Tighten the terminal screw making sure the pressure plate secures the wire.

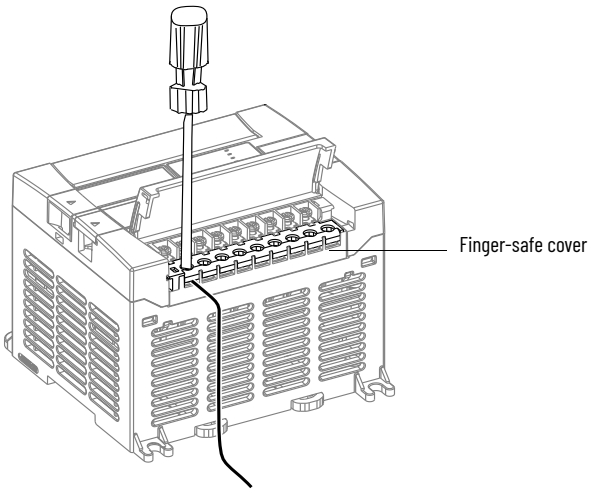

Wire with Spade Lugs

The diameter of the terminal screw head is 5.5 mm (0.22 in.). The input and output terminals of the MicroLogix 1200 controller are designed for a 6.35 mm (0.25 in.) wide spade (standard for #6 screw for up to 14 AWG) or a 4 mm (metric #4) fork terminal.

When using spade lugs, use a small, flat-blade screwdriver to pry the finger-safe cover from the terminal blocks as shown below. Then loosen the terminal screw.

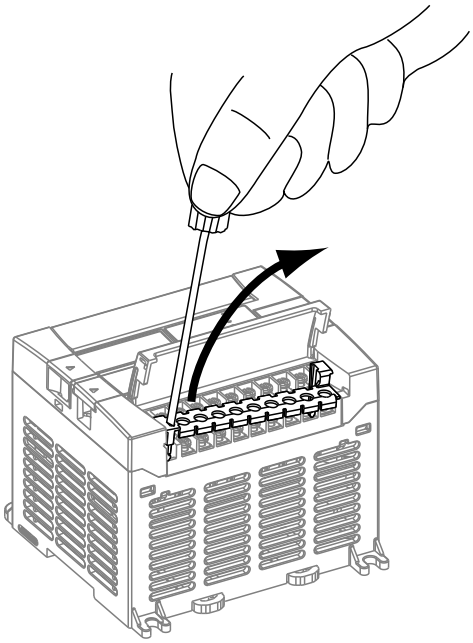

Use Surge Suppressors

Because of the potentially high current surges that occur when switching inductive load devices, such as motor starters and solenoids, the use of some type of surge suppression to protect and extend the operating life of the controllers output contacts is required. Switching inductive loads without surge suppression can significantly reduce the life expectancy of relay contacts. By adding a suppression device directly across the coil of an inductive device, you prolong the life of the output or relay contacts. You also reduce the effects of voltage transients and electrical noise from radiating into adjacent systems.

Figure 12 shows an output with a suppression device. We recommend that you locate the suppression device as close as possible to the load device.

Figure 12 - Output with Suppression Device Example

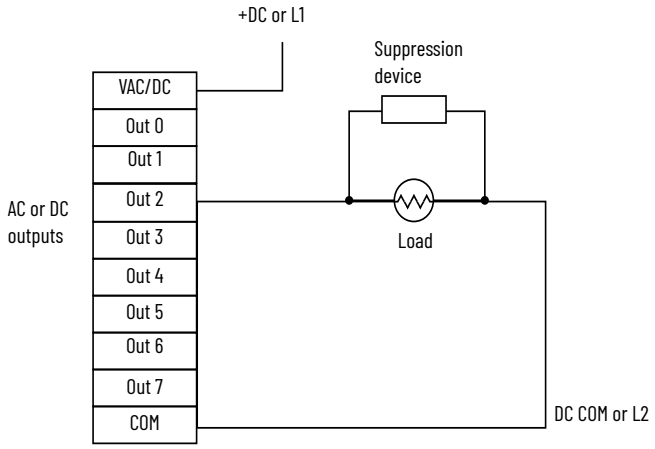

If the outputs are DC, we recommend that you use an 1N4004 diode for surge suppression, as shown below. For inductive DC load devices, a diode is suitable. A 1N4004 diode is acceptable for most applications. A surge suppressor can also be used. See Table 3 for recommended suppressors. As shown in Figure 13, these surge suppression circuits connect directly across the load device.

Figure 13 - Relay or Solid-state DC Output with Suppression Device Example

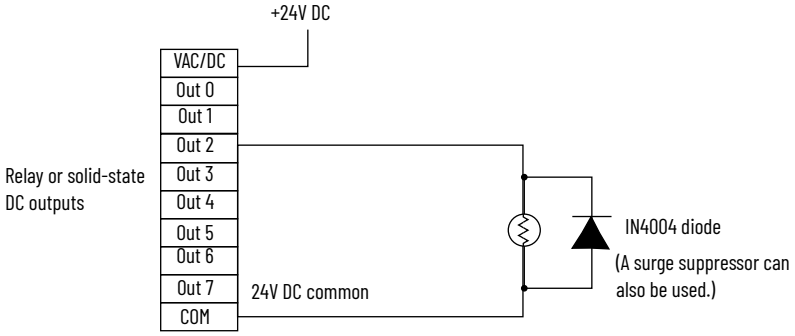

Suitable surge suppression methods for inductive AC load devices include a varistor, an RC network, or an Allen-Bradley surge suppressor, shown in Figure 14. These components must be appropriately rated to suppress the switching transient characteristic of the particular inductive device. See Table 3 for recommended suppressors.

Figure 14 - Surge Suppression for Inductive AC Load Devices

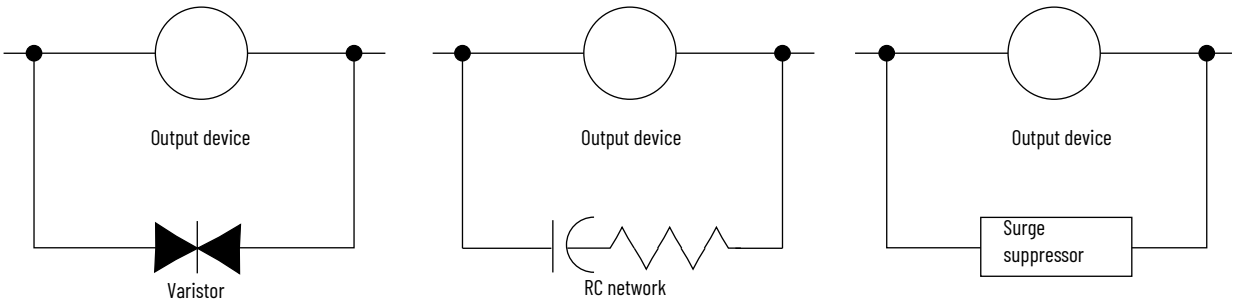

Recommended Surge Suppressors

Use the Allen-Bradley surge suppressors shown in the following table for use with relays, contactors, and starters.

Table 3 - Recommended Surge Suppressors

Device	Coil Voltage	Suppressor Catalog Number
Bulletin 509 Motor Starter Bulletin 509 Motor Starter	120V AC 240V AC	599-K04(1) 599-KA04(1)
Bulletin 100 Contactor Bulletin 100 Contactor	120V AC 240V AC	199-FSMA1(2) 199-FSMA2(2)
Bulletin 709 Motor Starter	120V AC	1401-N10(2)
Bulletin 700 Type R, RM Relays	AC coil	None required
Bulletin 700 Type R Relay Bulletin 700 Type RM Relay	12V DC 12V DC	199-FSMA9
Bulletin 700 Type R Relay Bulletin 700 Type RM Relay	24V DC 24V DC	199-FSMA9
Bulletin 700 Type R Relay Bulletin 700 Type RM Relay	48V DC 48V DC	199-FSMA9
Bulletin 700 Type R Relay Bulletin 700 Type RM Relay	115...125V DC 115...125V DC	199-FSMA10
Bulletin 700 Type R Relay Bulletin 700 Type RM Relay	230...250V DC 230...250V DC	199-FSMA11
Bulletin 700 Type N, P, or PK Relay	150V max, AC or DC	700-N24(2)
Miscellaneous electromagnetic devices limited to 35 sealed VA	150V max, AC or DC	700-N24(2)

(1) Varistor – Not recommended for use on relay outputs.
(2) RC Type – Do not use with triac outputs.

Ground the Controller

In solid-state control systems, grounding and wire routing helps limit the effects of noise due to electromagnetic interference (EMI). Run the ground connection from the ground screw of the controller to the ground bus prior to connecting any devices. Use 2.5 mm^2 (14 AWG) wire. For AC-powered controllers, this connection must be made for safety purposes.

ATTENTION: All devices connected to the RS-232 communication port must be referenced to controller ground, or be floating (not referenced to a potential other than ground). Failure to follow this procedure may result in property damage or personal injury.

- For 1762-L24BWA, 1762-L40BWA, 1762-L24BWAR, and 1762-L40BWAR controllers:
  The COM of the sensor supply is also connected to chassis ground internally. The 24V DC sensor power source should not be used to power output circuits. It should only be used to power input devices.
- For 1762-L24BXB, 1762-L40BXB, 1762-L24BXBR, and 1762-L40BXBR controllers: The VDC NEUT or common terminal of the power supply is also connected to chassis ground internally.

This product is intended to be mounted to a well grounded mounting surface such as a metal panel. See the Industrial Automation Wiring and Grounding Guidelines, publication 1770-4.1, for additional information. Additional grounding connections from the mounting tab or DIN rail, if used, are not required unless the mounting surface cannot be grounded.

Use all four mounting positions for panel mounting installation.

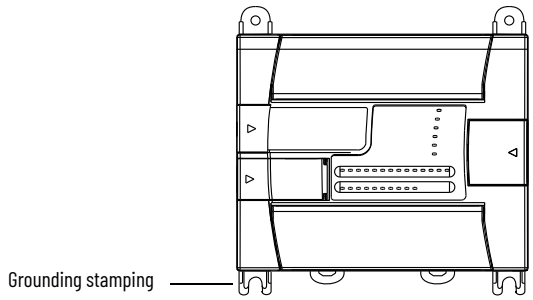

ATTENTION: Remove the protective debris strip before applying power to the controller. Failure to remove the strip may cause the controller to overheat.

Wiring Diagrams

The following illustrations show the wiring diagrams for the MicroLogix 1200 controllers. Controllers with DC inputs can be wired as either sinking or sourcing inputs. Sinking and sourcing does not apply to AC inputs. See the various diagrams described in Sinking and Sourcing Wiring Diagrams on page 34.

The controller terminal block layouts are shown in Terminal Block Layouts. The shading on the labels indicates how the terminals are grouped. A detail of the groupings is shown in the tables in Terminal Groupings on page 33.

This symbol denotes a protective earth ground terminal which provides a low impedance path between electrical circuits and earth for safety purposes and provides noise immunity improvement. This connection must be made for safety purposes on AC-powered controllers.

This symbol denotes a functional earth ground terminal which provides a low impedance path between electrical circuits and earth for non-safety purposes, such as noise immunity improvement.

Terminal Block Layouts

Figure 15 - 1762-L24AWA and 1762-L24AWAR

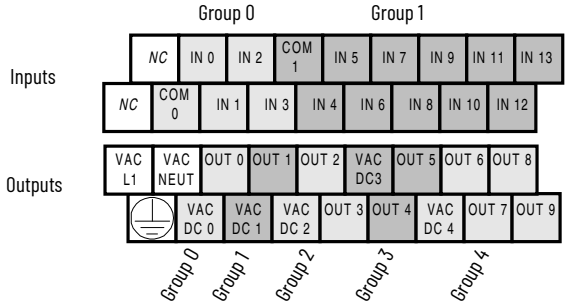

Figure 16 - 1762-L24BWA and 1762-L24BWAR

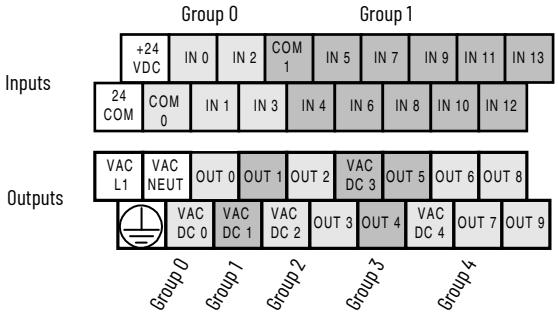

ATTENTION: The 24V DC sensor supply of the 1762-L24BWA and 1762-L24BWAR should not be used to power output circuits. It should only be used to power input devices (for example sensors and switches). See Master Control Relay on page 16 for information on MCR wiring in output circuits.

Figure 17 - 1762-L24BXB and 1762-L24BXBR

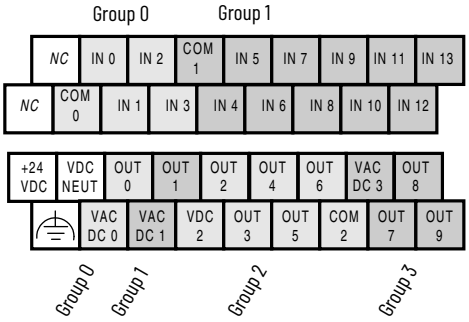

Figure 18 - 1762-L40AWA and 1762-L40AWAR

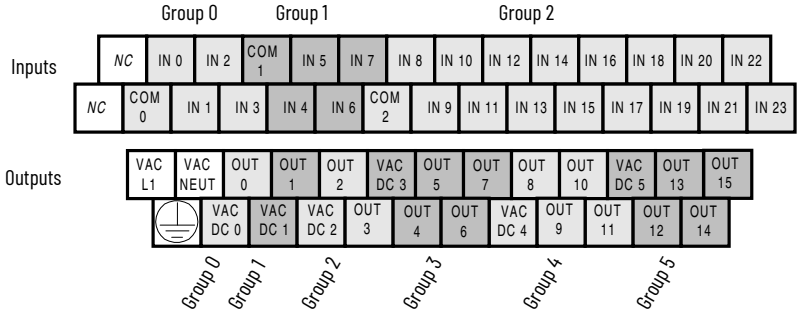

Figure 19 - 1762-L40BWA and 1762-L40BWAR

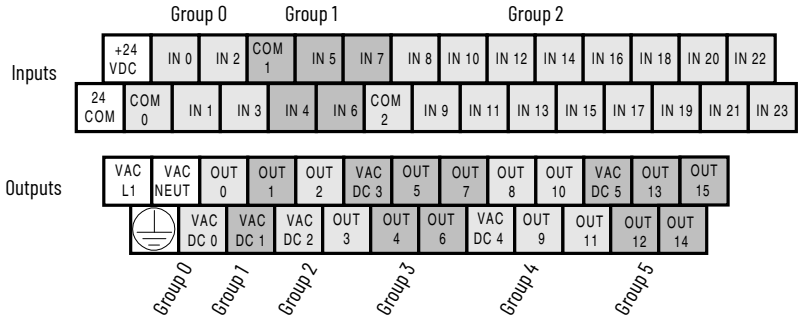

ATTENTION: The 24V DC sensor supply of the 1762-L40BWA and 1762-L40BWAR should not be used to power output circuits. It should only be used to power input devices (for example sensors and switches). See Master Control Relay on page 16 for information on MCR wiring in output circuits.

Figure 20 - 1762-L40BXB and 1762-L40BXBR

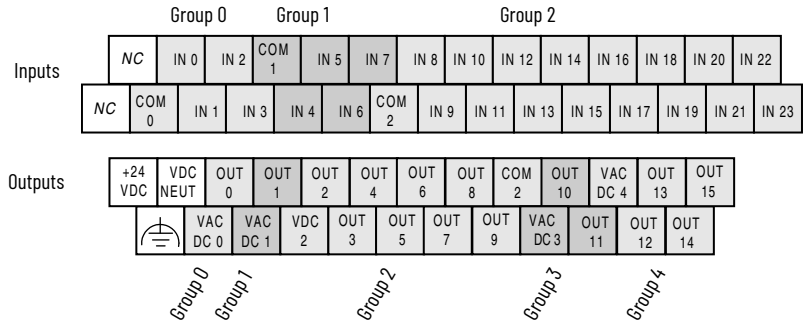

Terminal Groupings

Table 4 - Input Terminal Grouping

Controller	Inputs		
	Input Group	**Common Terminal**	**Input Terminal**
1762-L24AWA 1762-L24AWAR	Group 0	AC COM 0	I/0...I/3
	Group 1	AC COM 1	I/4...I/13
1762-L24BWA 1762-L24BWAR	Group 0	DC COM 0	I/0...I/3
	Group 1	DC COM 1	I/4...I/13
1762-L24BXB 1762-L24BXBR	Group 0	DC COM 0	I/0...I/3
	Group 1	DC COM 1	I/4...I/13
1762-L40AWA 1762-L40AWAR	Group 0	AC COM 0	I/0...I/3
	Group 1	AC COM 1	I/4...I/7
	Group 2	AC COM 2	I/8...I/23
1762-L40BWA 1762-L40BWAR	Group 0	DC COM 0	I/0...I/3
	Group 1	DC COM 1	I/4...I/7
	Group 2	DC COM 2	I/8...I/23
1762-L40BXB 1762-L40BXBR	Group 0	DC COM 0	I/0...I/3
	Group 1	DC COM 1	I/4...I/7
	Group 2	DC COM 2	I/8...I/23

Table 5 - Output Terminal Grouping

Controller	Outputs			
	Output Group	Voltage Terminal	Output Terminal	Description
1762-L24AWA 1762-L24AWAR	Group 0	VAC/VDC 0	0/0	Isolated Relay outputs
	Group 1	VAC/VDC 1	0/1	
	Group 2	VAC/VDC 2	0/2...0/3	
	Group 3	VAC/VDC 3	04...0/5	
	Group 4	VAC/VDC 4	0/6...0/9	
1762-L24BWA 1762-L24BWAR	Group 0	VAC/VDC 0	0/0	Isolated Relay outputs
	Group 1	VAC/VDC 1	0/1	
	Group 2	VAC/VDC 2	0/2...0/3	
	Group 3	VAC/VDC 3	0/4...0/5	
	Group 4	VAC/VDC 4	0/6...0/9	
1762-L24BXB 1762-L24BXBR	Group 0	VAC/VDC 0	0/0	Isolated Relay outputs
	Group 1	VAC/VDC 1	0/1	
	Group 2	VDC 2, VDC COM 2	0/2...0/6	Isolated FET outputs
	Group 3	VAC/VDC 3	0/7...0/9	Isolated Relay outputs
1762-L40AWA 1762-L40AWAR	Group 0	VAC/VDC 0	0/0	Isolated Relay outputs
	Group 1	VAC/VDC 1	0/1	
	Group 2	VAC/VDC 2	0/2...0/3	
	Group 3	VAC/VDC 3	0/4...0/7	
	Group 4	VAC/VDC 4	0/8...0/11	
	Group 5	VAC/VDC 5	0/12...0/15	
1762-L40BWA 1762-L40BWAR	Group 0	VAC/VDC 0	0/0	Isolated Relay outputs
	Group 1	VAC/VDC 1	0/1	
	Group 2	VAC/VDC 2	0/2...0/3	
	Group 3	VAC/VDC 3	0/4...0/7	
	Group 4	VAC/VDC 4	0/8...0/11	
	Group 5	VAC/VDC 5	0/12...0/15	
1762-L40BXB 1762-L40BXBR	Group 0	VAC/VDC 0	0/0	Isolated Relay outputs
	Group 1	VAC/VDC 1	0/1	
	Group 2	VDC 2, VDC COM 2	0/2...0/9	Isolated FET outputs
	Group 3	VAC/VDC 3	0/10...0/11	Isolated Relay outputs
	Group 4	VAC/VDC 4	0/12...0/15	

Sinking and Sourcing Wiring Diagrams

Any of the MicroLogix 1200 controller DC embedded input groups can be configured as sinking or sourcing depending on how the DC COM is wired on the group.

Type	Definition
Sinking Input	The input energizes when high-level voltage is applied to the input terminal (active high). Connect the power supply VDC (-) to the input group's COM terminal.
Sourcing Input	The input energizes when low-level voltage is applied to the input terminal (active low). Connect the power supply VDC (+) to the input group's COM terminal.

ATTENTION: The 24V DC sensor power source must not be used to power output circuits. It should only be used to power input devices (for example sensors and switches). See Master Control Relay on page 16 for information on MCR wiring in output circuits.

1762-L24AWA, 1762-L24BWA, 1762-L24BXB, 1762-L24AWAR, 1762-L24BWAR and 1762-L24BXBR Wiring Diagrams

In Figure 21 to Figure 34, lower case alphabetic subscripts are appended to common-terminal connections to indicate that different power sources may be used for different isolated groups, if desired.

Figure 21 - 1762-L24AWA and 1762-L24AWAR Input Wiring Diagram(1)

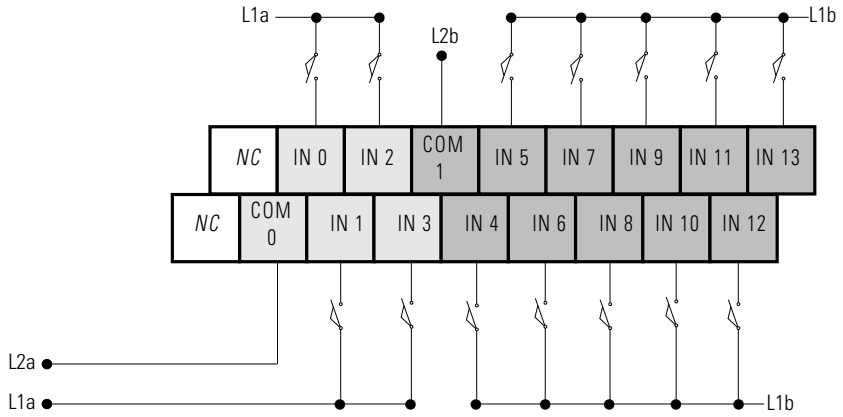

(1) "NC" terminals are not intended for use as connection points.

Figure 22 - 1762-L24BWA and 1762-L24BWAR Sinking Input Wiring Diagram

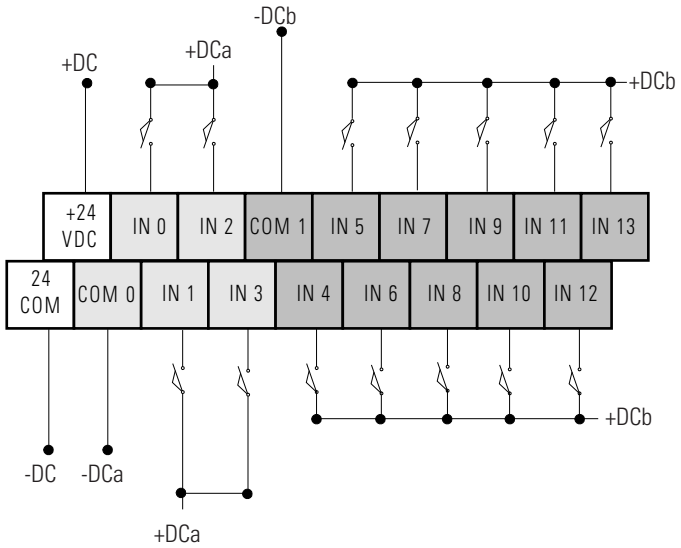

Figure 23 - 1762-L24BWA and 1762-L24BWAR Sourcing Input Wiring Diagram

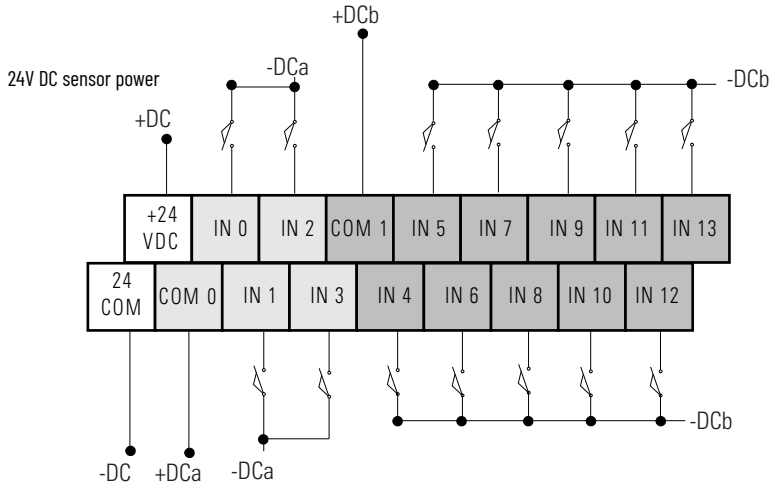

Figure 24 - 1762-L24BXB and 1762-L24BXBR Sinking Input Wiring Diagram

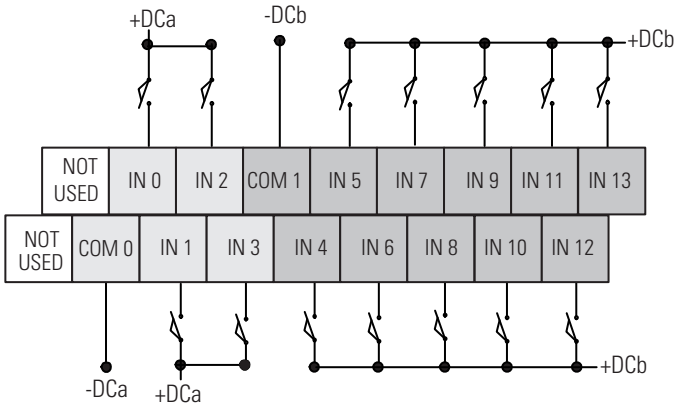

Figure 25 - 1762-L24BXB and 1762-L24BXBR Sourcing Input Wiring Diagram

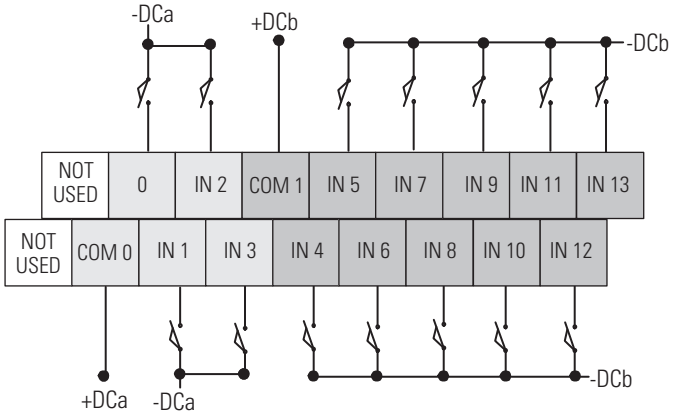

Figure 26 - 1762-L24AWA, 1762-L24BWA, 1762-L24AWAR, and 1762-L24BWAR Output Wiring Diagram

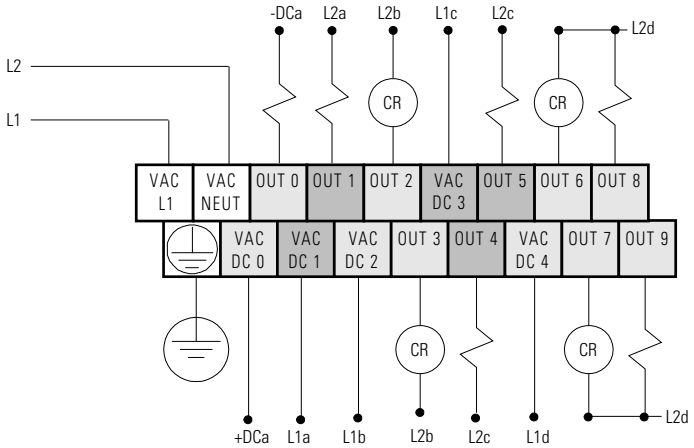

Figure 27 - 1762-L24BXB and 1762-L24BXBR Output Wiring Diagram

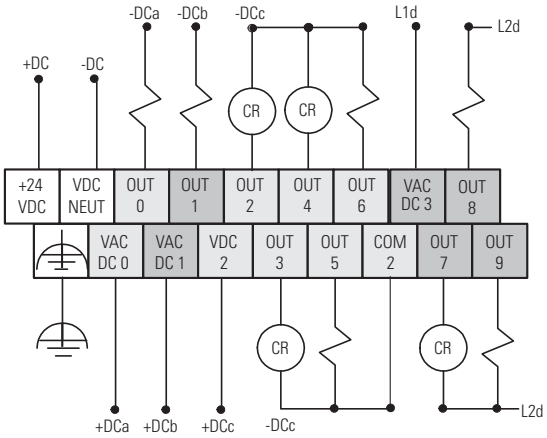

1762-L40AWA, 1762-L40BWA, 1762-L40BXB, 1762-L40AWAR, 1762-L40BWAR and 1762-L40BXBR Wiring Diagrams

Figure 28 - 1762-L40AWA and 1762-L40AWAR Input Wiring Diagram

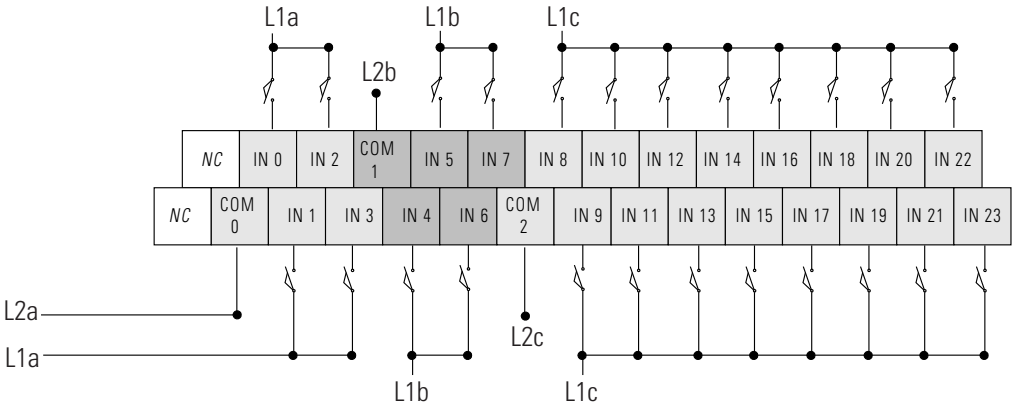

Figure 29 - 1762-L40BWA and 1762-L40BWAR Sinking Input Wiring Diagram

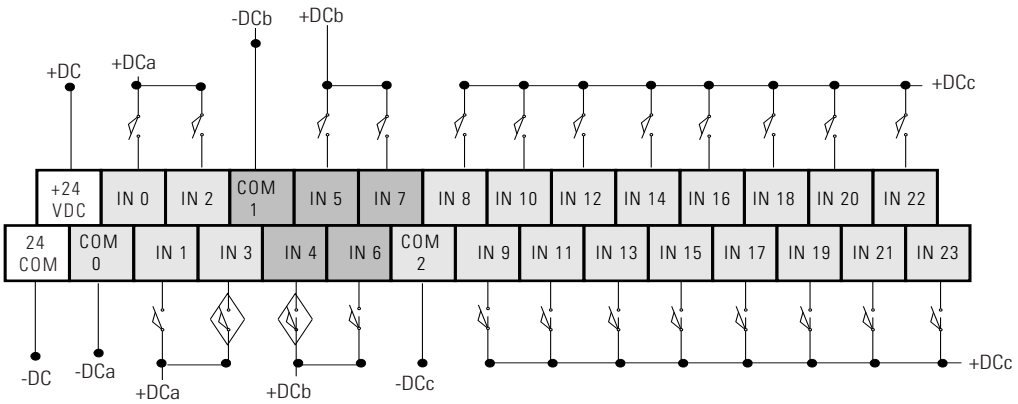

Figure 30 - 1762-L40BWA and 1762-L40BWAR Sourcing Input Wiring Diagram

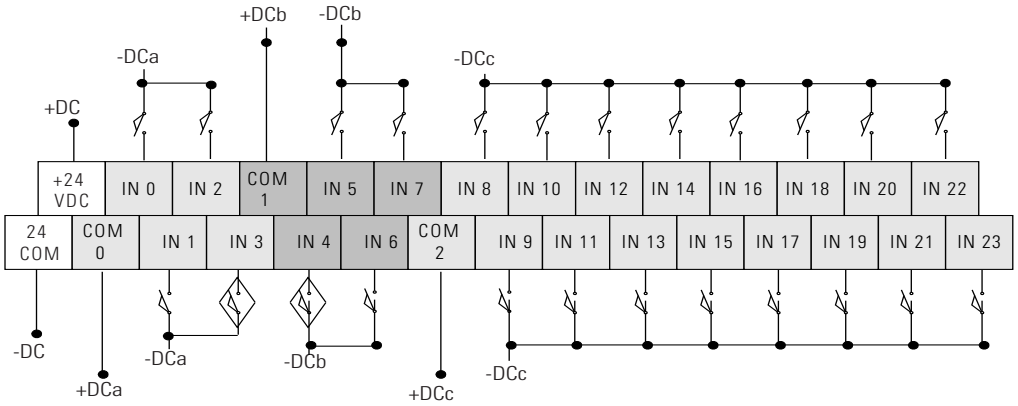

Figure 31 - 1762-L40BXB and 1762-L40BXBR Sinking Input Wiring Diagram

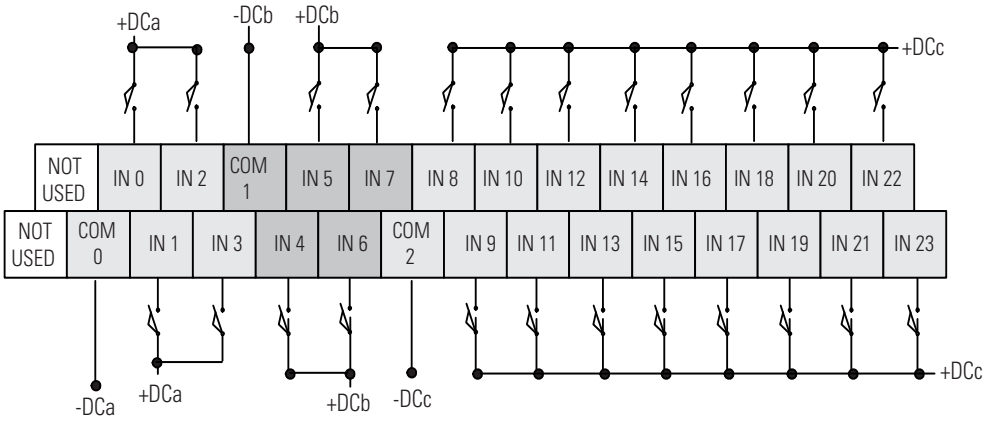

Figure 32 - 1762-L40BXB and 1762-L40BXBR Sourcing Input Wiring Diagram

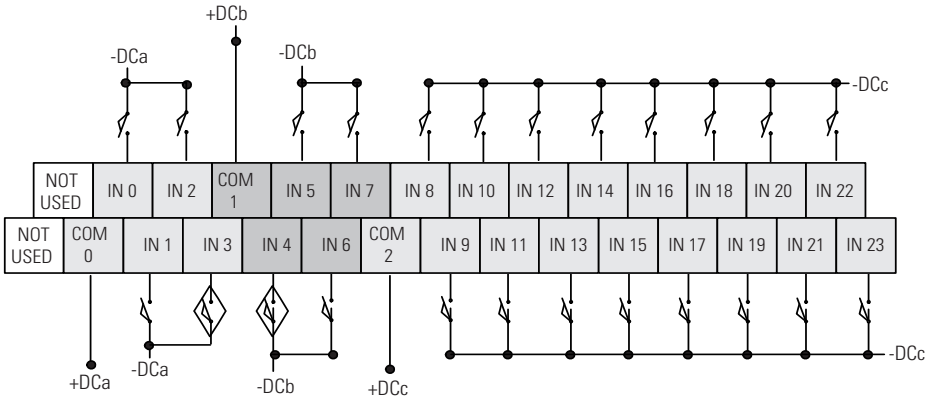

Figure 33 - 1762-L40AWA, 1762-L40BWA, 1762-L40AWAR, and 1762-L40BWAR Output Wiring Diagram

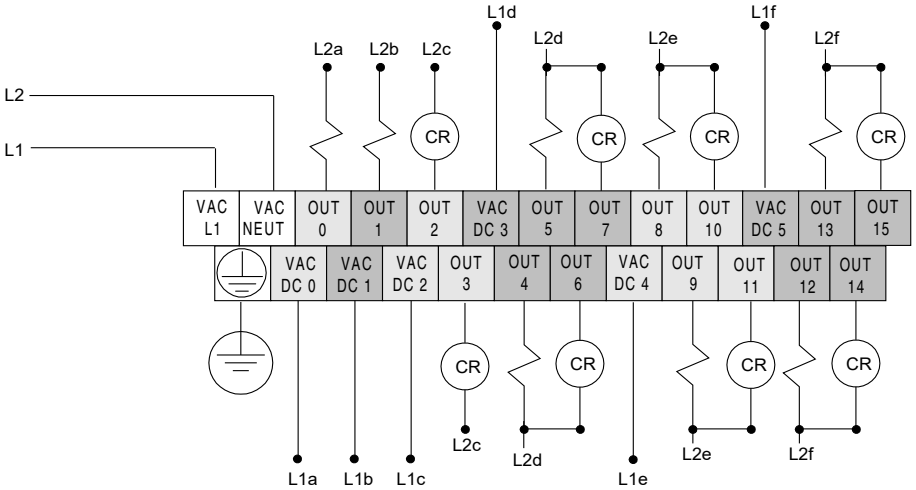

Figure 34 - 1762-L40BXB and 1762-L40BXBR Output Wiring Diagram

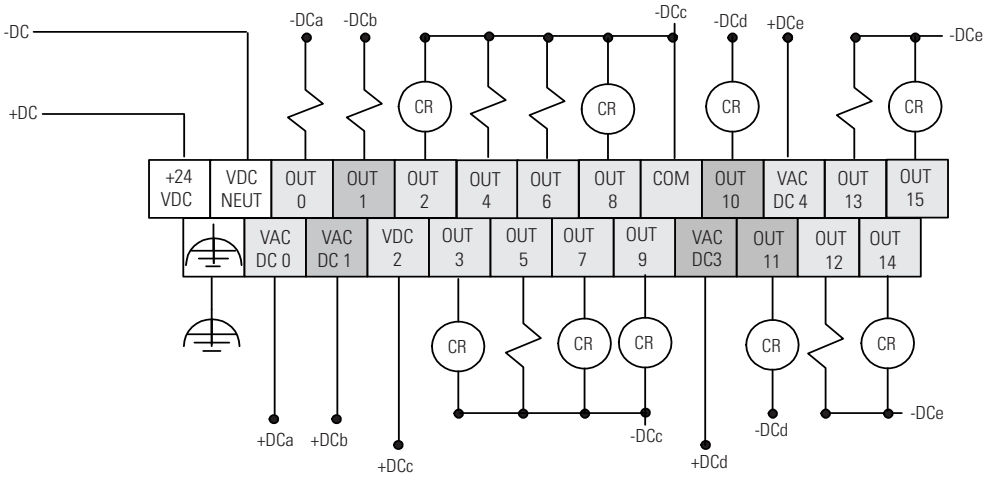

Controller I/O Wiring

Minimize Electrical Noise

Because of the variety of applications and environments where controllers are installed and operating, it is impossible to ensure that all environmental noise will be removed by input filters. To help reduce the effects of environmental noise, install the MicroLogix 1200 system in a properly rated (for example, NEMA) enclosure. Make sure that the MicroLogix 1200 system is properly grounded.

A system may malfunction due to a change in the operating environment after a period of time. We recommend periodically checking system operation, particularly when new machinery or other noise sources are installed near the Micrologix 1200 system.

Expansion I/O Wiring

Figure 35 to Figure 47 show the discrete and analog expansion I/O wiring diagrams.

Discrete Wiring Diagrams

Figure 35 - 1762-IA8 Wiring Diagram

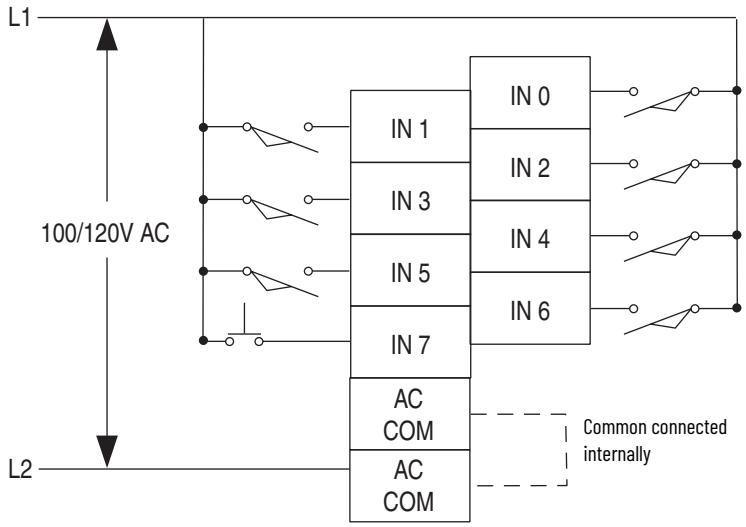

Figure 36 - 1762-IQ8 Wiring Diagram

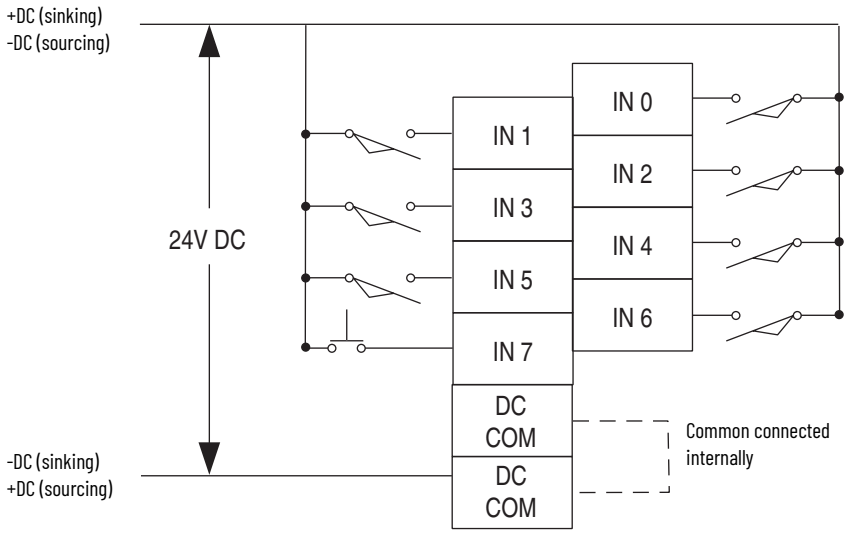

Figure 37 - 1762-IQ16 Wiring Diagram

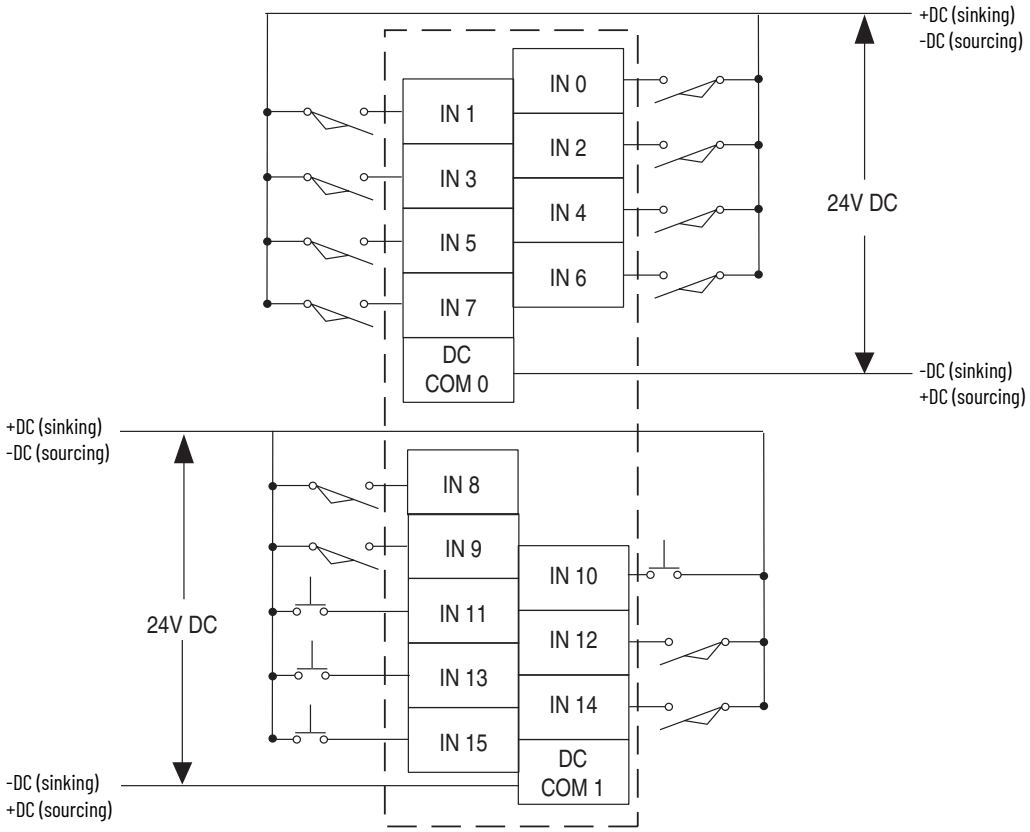

Figure 38 - 1762-IQ32T Wiring Diagram

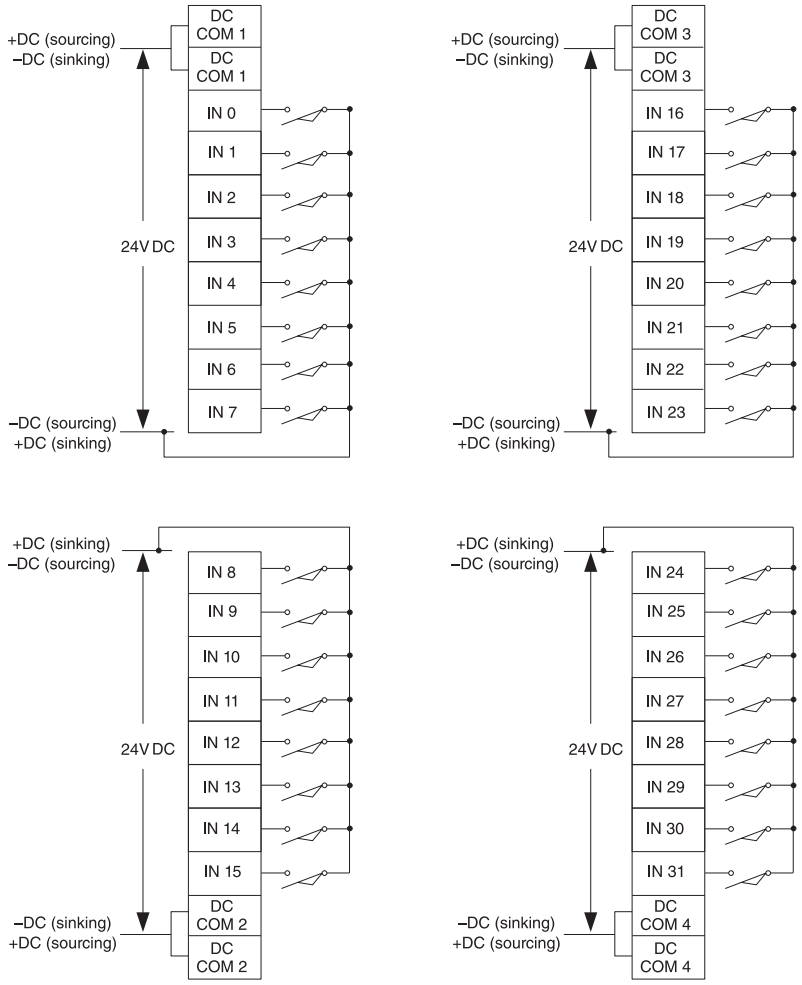

Figure 39 - 1762-OA8 Wiring Diagram

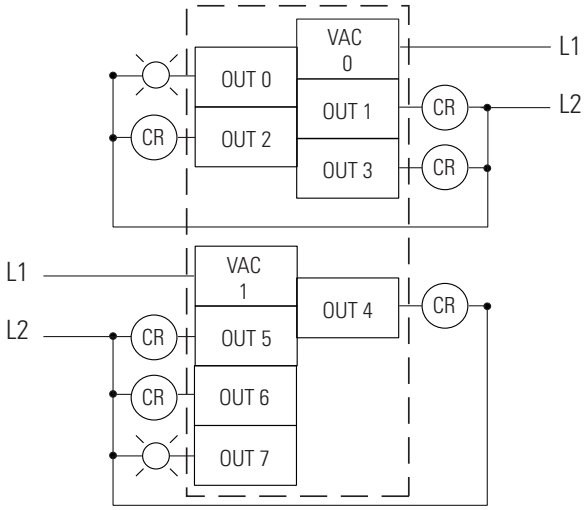

Figure 40 - 1762-OB8 Wiring Diagram

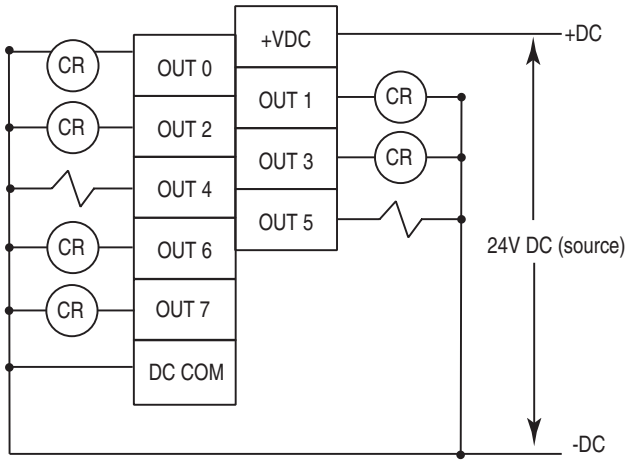

Figure 41 - 1762-OB16 Wiring Diagram

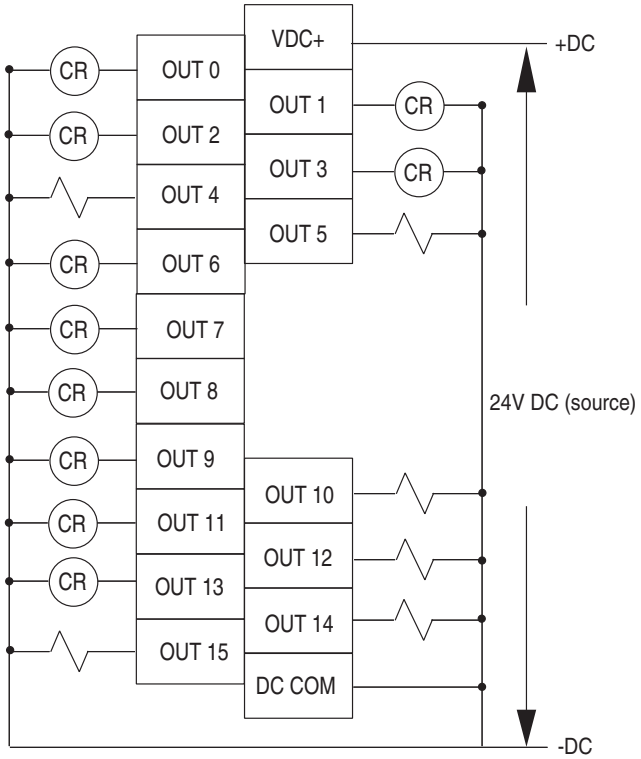

Figure 42 - 1762-OB32T Wiring Diagram

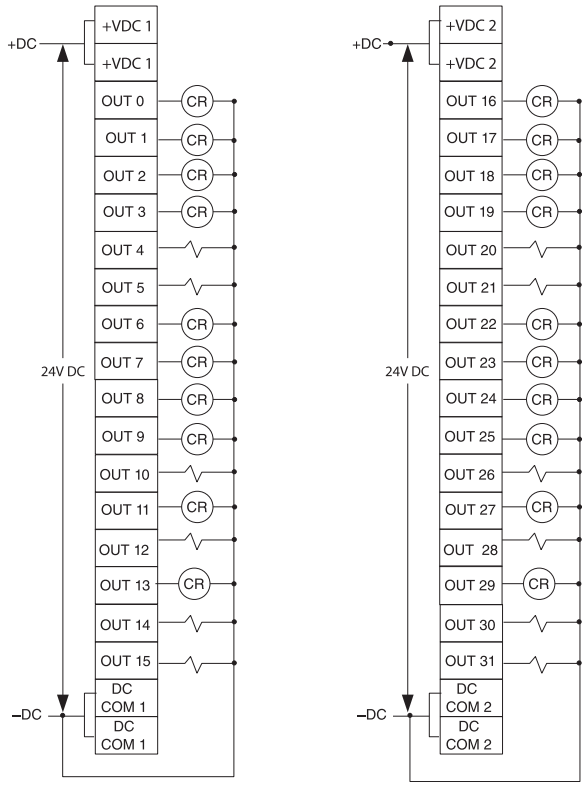

Figure 43 - 1762-OV32T Wiring Diagram

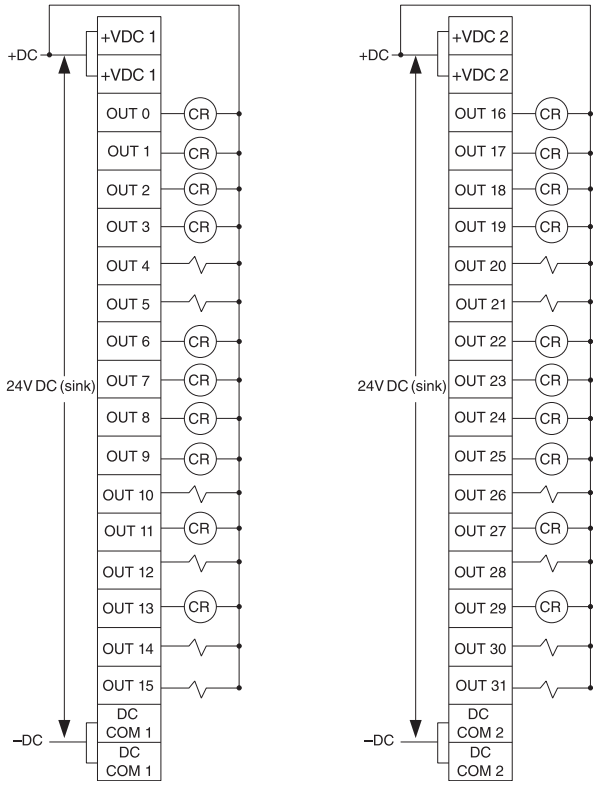

Figure 44 - 1762-OW8 Wiring Diagram

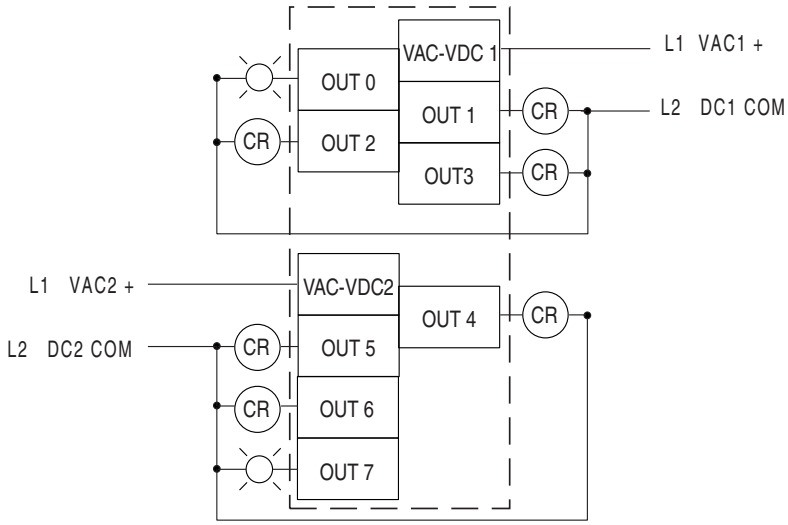

Figure 45 - 1762-OW16 Wiring Diagram

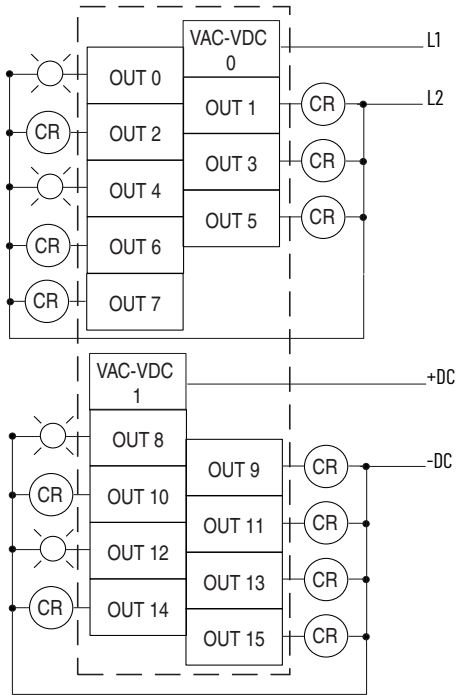

Figure 46 - 1762-OX6I Wiring Diagram

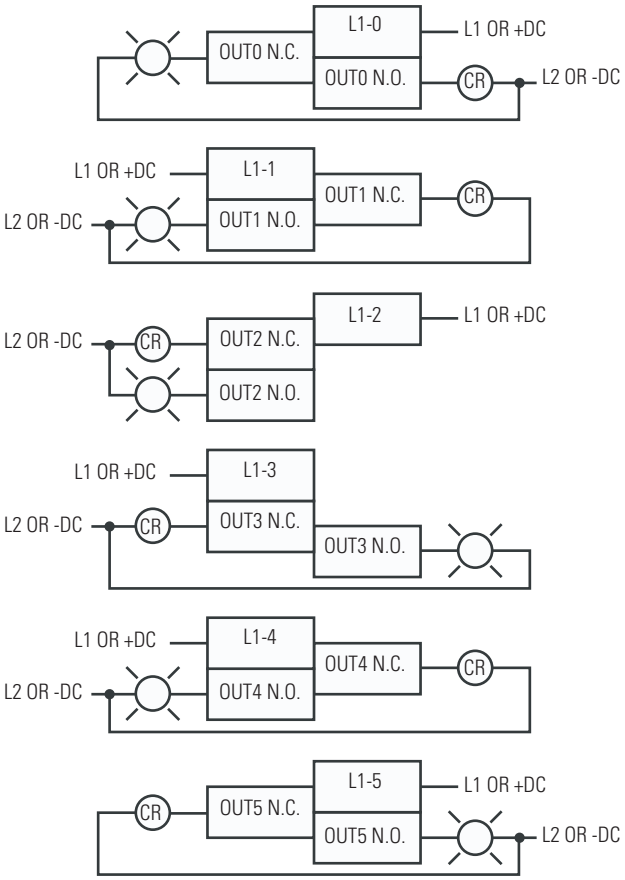

Figure 47 - 1762-IQ8OW6 Wiring Diagram

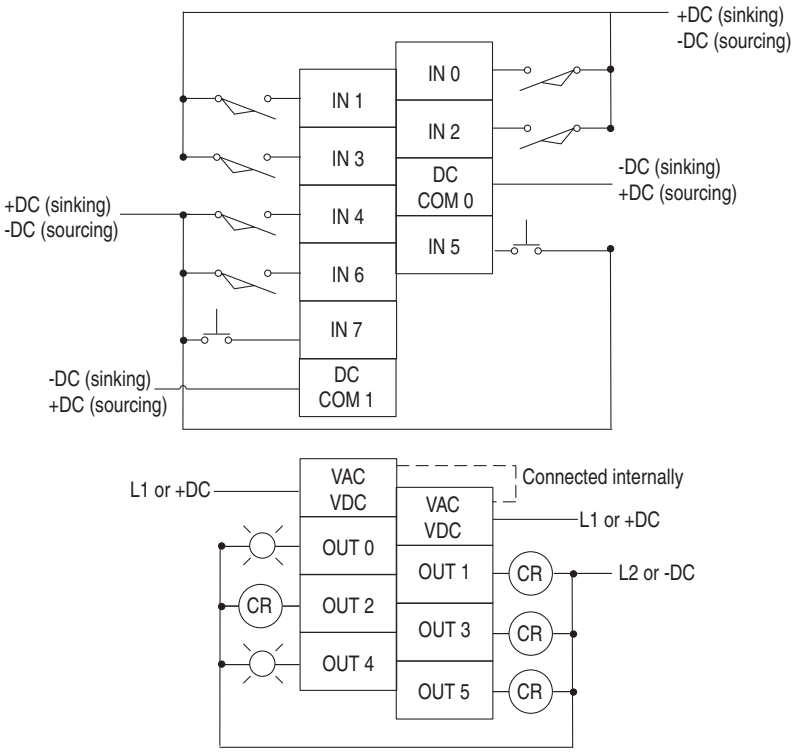

Analog Wiring

System Wiring Guidelines

Consider the following when wiring your analog modules:

- The analog common (COM) is not connected to earth ground inside the module. All terminals are electrically isolated from the system.
- Channels are not isolated from each other.
- Use Belden 8761 or equivalent shielded wire.
- Under normal conditions, the drain wire (shield) should be connected to the metal mounting panel (earth ground). Keep the shield connection to earth ground as short as possible.
- To ensure optimum accuracy for voltage type inputs, limit overall cable impedance by keeping all analog cables as short as possible. Locate the I/O system as close to your voltage type sensors or actuators as possible.
- The module does not provide loop power for analog inputs. Use a power supply that matches the input transmitter specifications.

1762-IF2OF2 Input Type Selection

Select the input type, current or voltage, using the switches located on the module's circuit board *and* the input type/range selection bits in the Configuration Data File. See the MicroLogix 1200 and MicroLogix 1500 Programmable Controllers Instruction Set Reference Manual, publication 1762-RM001. You can access the switches through the ventilation slots on the top of the module. Switch 1 controls channel 0; switch 2 controls channel 1. The factory default setting for both switch 1 and switch 2 is Current. Switch positions are shown in Figure 48.

Figure 48 - 1762-IF2OF2 Switch Positions

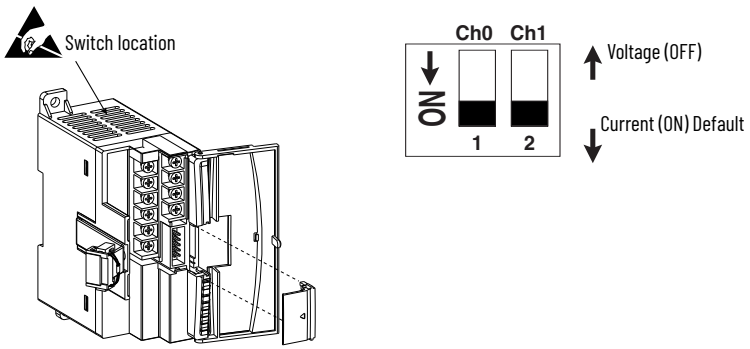

1762-IF2OF2 Output Type Selection

The output type selection, current or voltage, is made by wiring to the appropriate terminals, Iout or Vout, *and* by the type/range selection bits in the Configuration Data File. See the MicroLogix 1200 and MicroLogix 1500 Programmable Controllers Instruction Set Reference Manual, publication 1762-RM001.

ATTENTION: Analog outputs may fluctuate for less than a second when power is applied or removed. This characteristic is common to most analog outputs. While the majority of loads will not recognize this short signal, it is recommended that preventive measures be taken to ensure that connected equipment is not affected.

1762-IF2OF2 Wiring

Figure 49 shows the 1762-IF2OF2 analog expansion I/O terminal block.

Figure 49 - 1762-IF2OF2 Terminal Block Layout

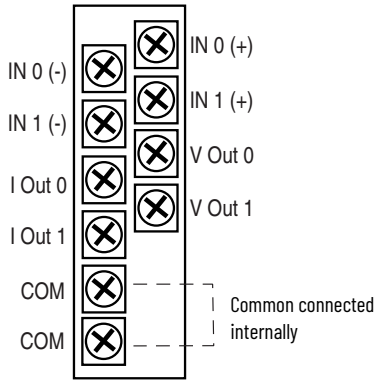

Figure 50 - Differential Sensor Transmitter Types

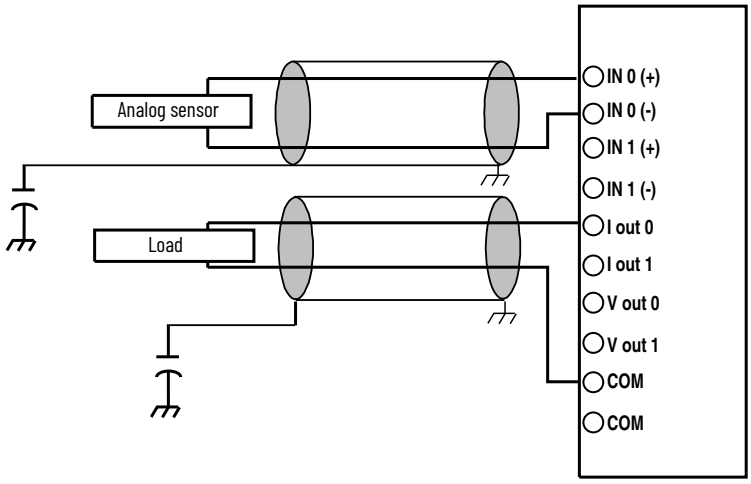

Figure 51 - Single-ended Sensor/Transmitter Types

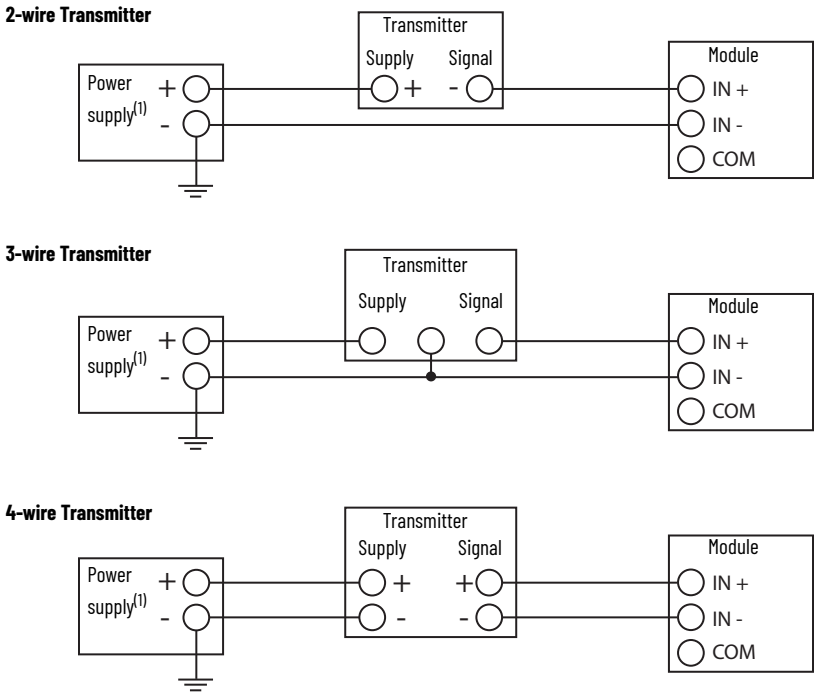

(1) All power supplies rated N.E.C. Class 2

1762-IF4 Input Type Selection

Select the input type, current or voltage, using the switches located on the module's circuit board *and* the input type/range selection bits in the Configuration Data File. See the MicroLogix 1200 and MicroLogix 1500 Programmable Controllers Instruction Set Reference Manual, publication 1762-RM001. You can access the switches through the ventilation slots on the top of the module.

Figure 52 - 1762-IF4 Switch Positions

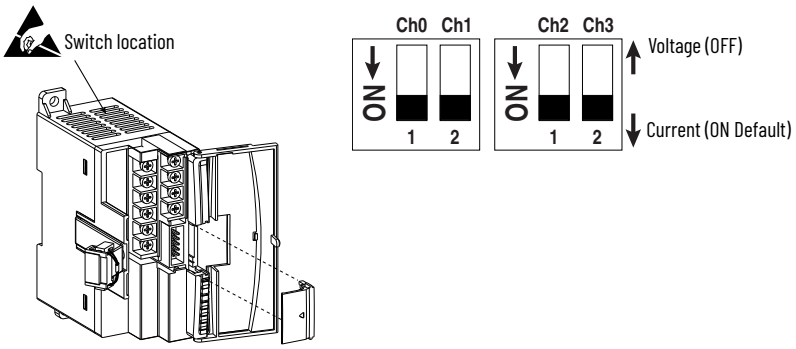

Figure 53 - 1762-IF4 Terminal Block Layout

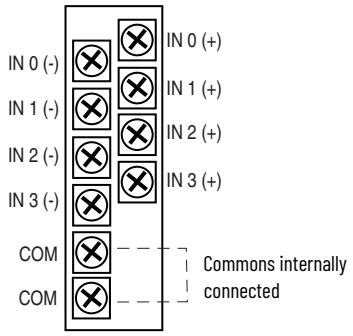

Figure 54 - Differential Sensor Transmitter Types

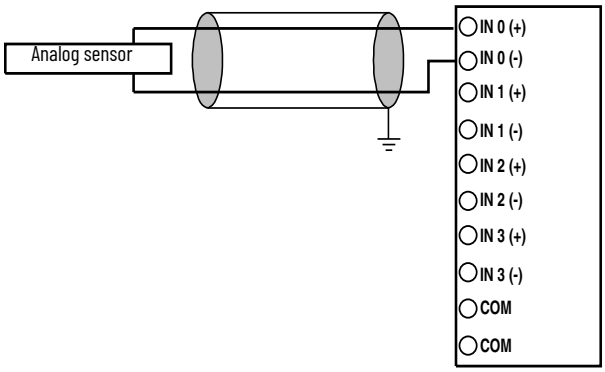

Grounding the cable shield at the module end only usually provides sufficient noise immunity. However, for best cable shield performance, earth ground the shield at both ends, using a 0.01 µF capacitor at one end to block AC power ground currents, if necessary.

Figure 55 - Sensor/Transmitter Types

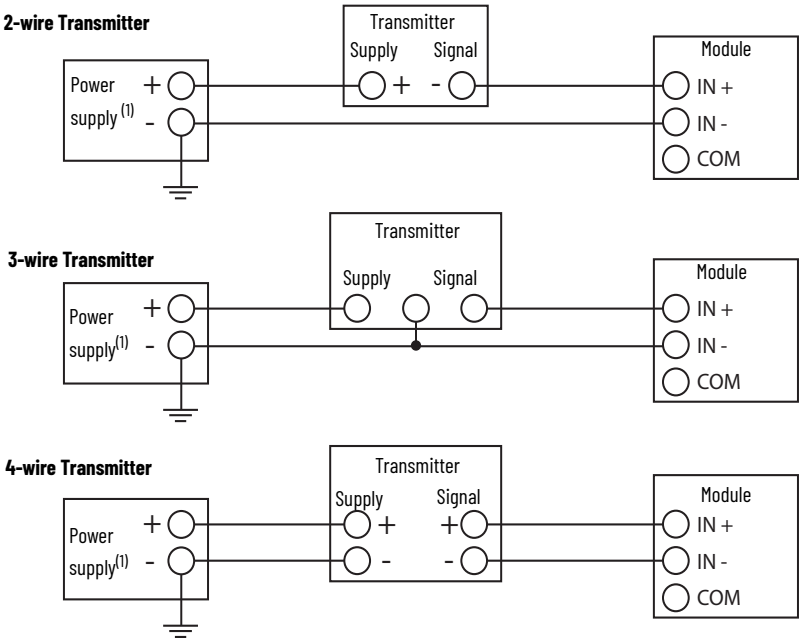

(1) All power supplies rated N.E.C. Class 2

1762-OF4 Output Type Selection

The output type selection, current or voltage, is made by wiring to the appropriate terminals, Iout or Vout, and by the type/range selection bits in the Configuration Data File.

Figure 56 - 1762-OF4 Terminal Block Layout

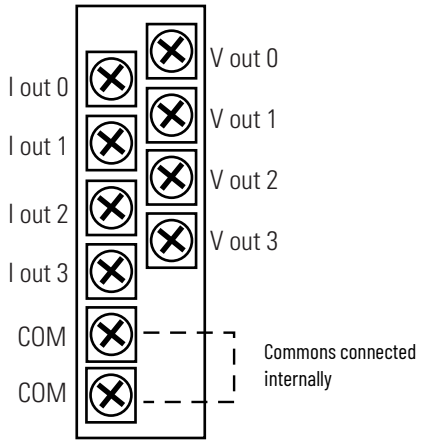

Figure 57 - 1762-OF4 Wiring

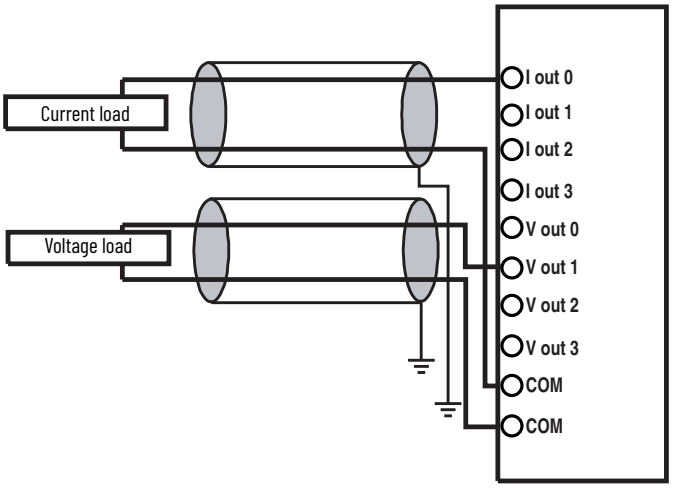

Notes:

Communication Connections

Introduction

The method you use and cabling required to connect your controller depends on what type of system you are employing. This chapter also describes how the controller establishes communication with the appropriate network.

MicroLogix 1200 controllers with the additional communications port (1762-L24AWAR, 1762-L24BWAR, 1762-L24BXBR, 1762-L40AWAR, 1762-L40BWAR, 1762-L40BXBR) offer advanced communications options, providing a clean, cost effective solution for applications requiring a network connection and HMI.

The additional communications port (Programmer/HMI Port) enables two communication devices to be connected to the controller simultaneously. For example, it provides local connectivity of an operator interface or programming terminal such as DF1 PanelView™ HMI, IBM-compatible personal computer using RSLogix 500 programming software, or 1747-PSD program storage device, and also allows the primary port (Channel 0) to be connected to either a network, a modem, or an ASCII device such as a barcode reader or weigh scale.

Supported Communication Protocols

MicroLogix 1200 controllers support the following communication protocols from the primary RS-232 communication channel, Channel 0:

- DH-485
- DF1 Full-duplex
- DF1 Half-duplex master and slave
- DF1 Radio modem
- Modbus RTU master and slave
- ASCII

The 1762-L24AWAR, 1762-L24BWAR, 1762-L24BXBR, 1762-L40AWAR, 1762-L40BWAR, and 1762-L40BXBR controllers are equipped with an additional RS-232 communication channel called the Programmer/HMI port, which supports DF1 Full-duplex only. The controller cannot initiate messages through this port. It can only respond to messages sent to it. All communication parameters are fixed and cannot be changed by a user.

See Default Communication Configuration on page 53 for the configuration settings.

For more information on MicroLogix 1200 communications, see MicroLogix 1200 and MicroLogix 1500 Programmable Controllers Instruction Set Reference Manual, publication 1762-RM001.

Default Communication Configuration

The MicroLogix 1200 has the following default communication configuration. The same default configuration is applied for both Channel 0 and the Programmer/HMI Port (for 1762-LxxxxxR only). The configurations for the Programmer/HMI Port are fixed and you cannot change them.

For Channel 0, the default configuration is present when:

- The controller is powered-up for the first time
- The Communications Toggle push button specifies default communications (the DCOMM LED is on)
- An OS upgrade is completed

See Connect to Networks via RS-232 Interface on page 97 for more information on communicating.

Table 6 - DF1 Full-duplex Default Configuration Parameters

Parameter	Default
Baud Rate	19.2K
Parity	none
Source ID (Node Address)	1
Control Line	no handshaking
Stop Bits	1

Use the Communications Toggle Push Button

The Communications Toggle push button is located on the processor under the processor door (if installed), as shown below.

Use the Communications Toggle push button to change from the user-defined communication configuration to the default communications mode and back on Channel 0. The parameters of the Programmer/HMI Port are fixed at the default communications configuration. The Default Communications (DCOMM) LED operates to show when the controller is in the default communications mode (settings shown in Table 6).

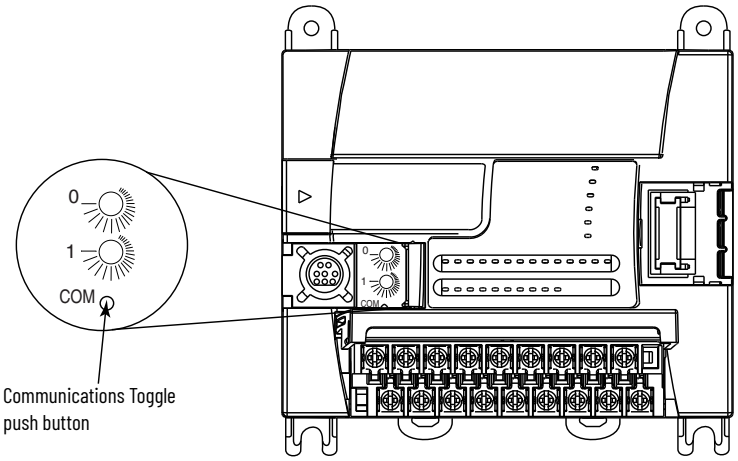

The Communications Toggle push button must be pressed and held for one second to activate.

The Communications Toggle push button only affects the communication configuration of Channel 0.

Connect to the RS-232 Port

There are two ways to connect the MicroLogix 1200 programmable controller to your computer using the DF1 protocol: using a point-to-point connection, or using a modem. Descriptions of these methods follow.

ATTENTION: All devices connected to the RS-232 communication port must be referenced to controller ground, or be floating (not referenced to a potential other than ground). Failure to follow this procedure may result in property damage or personal injury.

- For 1762-L24BWA, 1762-L40BWA, 1762-L24BWAR and 1762-L40BWAR controllers: The COM of the sensor supply is also connected to chassis ground internally. The 24V DC sensor power source should not be used to power output circuits. It should only be used to power input devices.
- For 1762-L24BXB, 1762-L40BXB, 1762-L24BXBR and 1762-L40BXBR controllers: The VDC NEUT or common terminal of the power supply is also connected to chassis ground internally.

Table 7 - Available Communication Cables

Communication Cables	Length
1761-CBL-PM02 series C or later	2 m (6.5 ft.)
1761-CBL-HM02 series C or later	2 m (6.5 ft.)
1761-CBL-AM00 series C or later	45 cm (17.7 in.)
1761-CBL-AP00 series C or later	45 cm (17.7 in.)
1761-CBL-PH02 series A or later	2 m (6.5 ft.)
1761-CBL-AH02 series A or later	2 m (6.5 ft.)
2707-NC8 series A or later	2 m (6.5 ft.)
2707-NC9 series B or later	15 m (49.2 ft.)
2707-NC10 series B or later	2 m (6.5 ft.)
2707-NC11 series B or later	2 m (6.5 ft.)

Make a DF1 Point-to-Point Connection

You can connect the MicroLogix 1200 programmable controller to your computer using a serial cable (1761-CBL-PM02) from your personal computer's serial port to the controller's Channel 0 and/or the Programmer/HMI port (for 1762-LxxxxxR only). The recommended protocol for this configuration is DF1 Full-duplex.

We recommend using an Advanced Interface Converter (AIC+), catalog number 1761-NET-AIC, as your optical isolator, as shown on the following page. See Cable Selection Guide on page 62 for specific AIC+ cabling information.

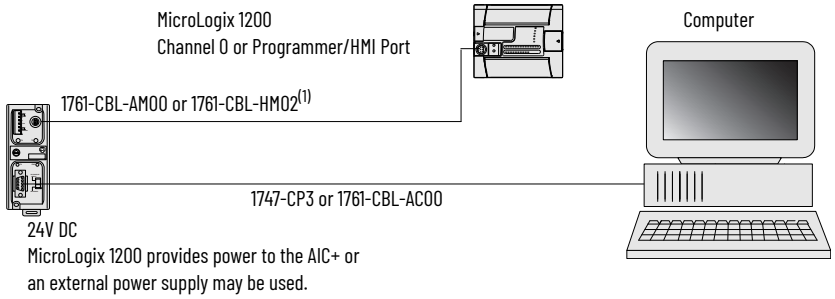

(1) Series C or later cables are required.

Use a Modem

You can use modems to connect a computer to one MicroLogix 1200 controller (using DF1 Full-duplex protocol), to multiple controllers (using DF1 Half-duplex protocol), or Modbus RTU slave protocol via Channel 0, as shown in Figure 58. See Connect to Networks via RS-232 Interface on page 97 for information on types of modems you can use with the micro controllers.

IMPORTANT	Do not attempt to use DH-485 protocol through modems under any circumstance. The communication timing using the DH-485 protocol is not supported by modem communications.

Figure 58 - Modem Connection

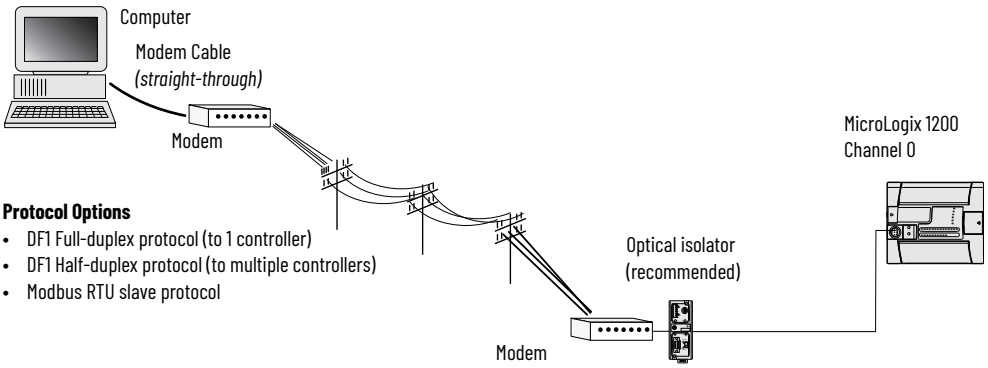

We recommend using an AIC+, catalog number 1761-NET-AIC, as your optical isolator. See Cable Selection Guide on page 62 for specific AIC+ cabling information.

Isolated Modem Connection

Using an AIC+ to isolate the modem is illustrated in Figure 59.

Figure 59 - Isolated Modem Connection Example

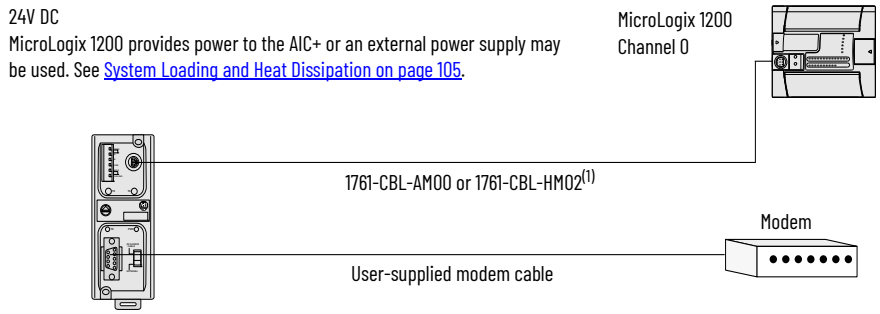

(1) Series C or later cables are required.

For additional information on connections using the AIC+, see the AIC+ Advanced Interface Converter User Manual, publication 1761-UM004.

Construct Your Own Modem Cable

If you construct your own modem cable, the maximum cable length is 15.24 m (50 ft.) with a 25-pin or 9-pin connector. See Figure 60 for constructing a straight-through cable.

Figure 60 - Straight-through Cable Typical Pinout

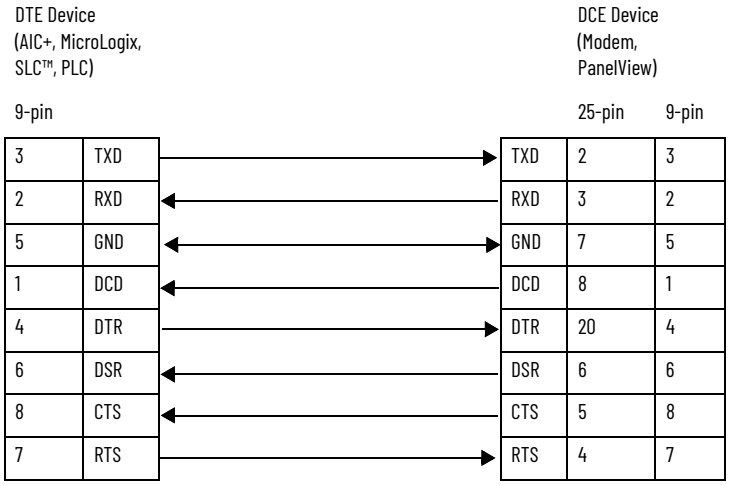

Construct Your Own Null Modem Cable

If you construct your own null modem cable, the maximum cable length is 15.24 m (50 ft.) with a 25-pin or 9-pin connector. See Figure 61 for constructing a null modem cable.

Figure 61 - Null Modem Cable Typical Pinout

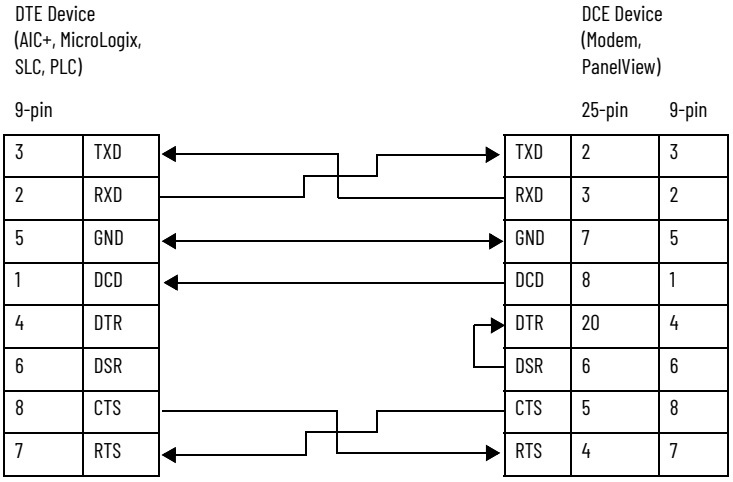

DF1 Half-duplex Master/Slave Network

Use Figure 62 for DF1 Half-duplex master/slave protocol without hardware handshaking.

Figure 62 - DF1 Half-duplex Master/Slave Protocol

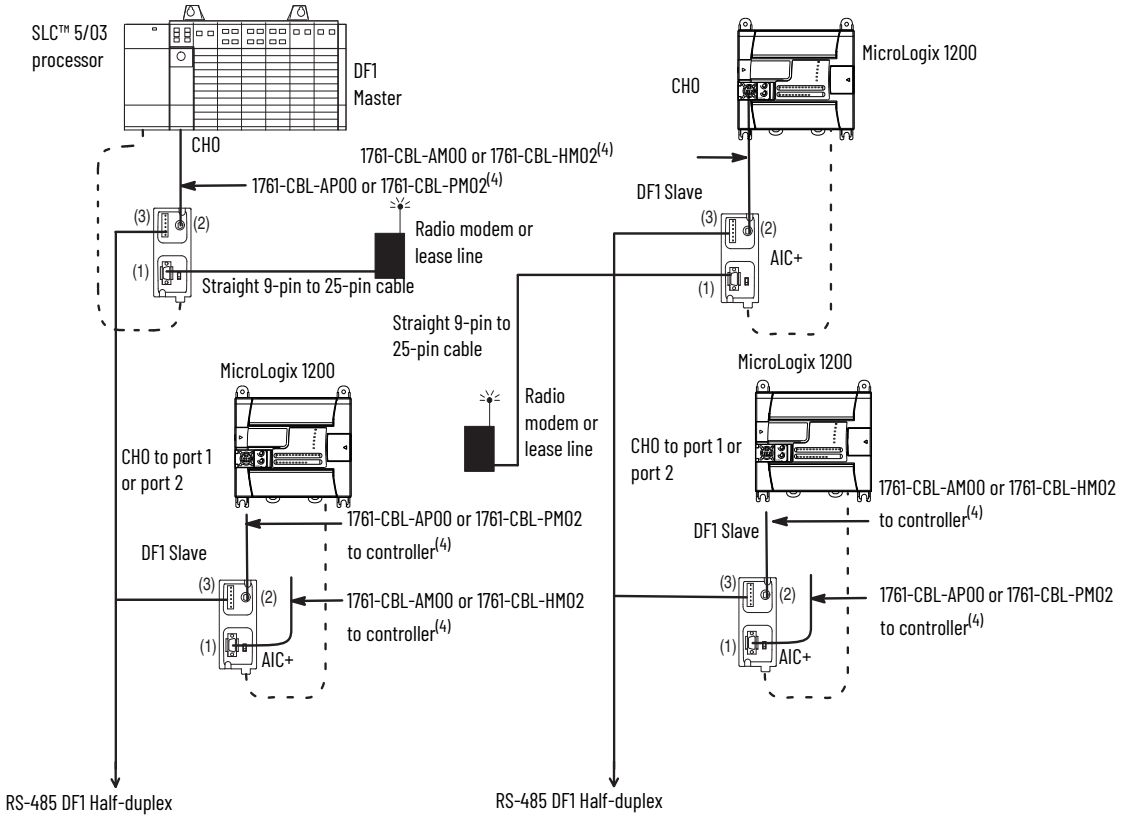

(1) DB-9 RS-232 port
(2) mini-DIN 8 RS-232 port
(3) RS-485 port
(4) Series C or later cables are required.

Connect to a DH-485 Network

Figure 63 shows how to connect to a DH-485 network.

Figure 63 - Connect to a DH-485 Network

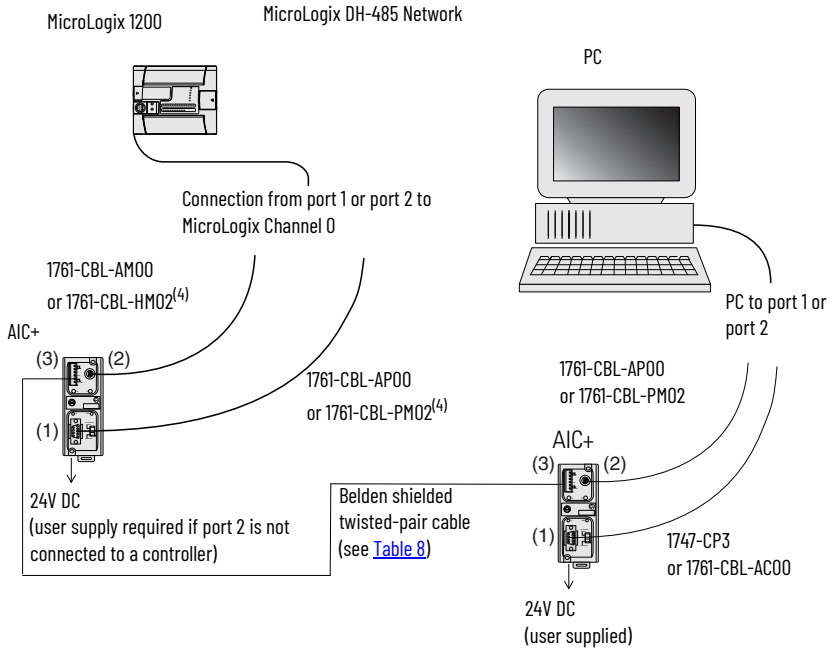

(1) DB-9 RS-232 port
(2) mini-DIN 8 RS-232 port
(3) RS-485 port
(4) Series C or later cables are required.

Recommended Tools

To connect a DH-485 network, you need tools to strip the shielded cable and to attach the cable to the AIC+ Advanced Interface Converter. We recommend the following equipment (or equivalent):

Table 8 - Working with Cable for DH-485 Network

Description	Part Number	Manufacturer
Shielded Twisted Pair Cable	#3106A or #9842	Belden
Stripping Tool	Not applicable	Not applicable
1/8" Slotted Screwdriver	Not applicable	Not applicable

DH-485 Communication Cable

The suggested DH-485 communication cable is either Belden #3106A or #9842. The cable is jacketed and shielded with one or two twisted-wire pairs and a drain wire.

One pair provides a balanced signal line and one additional wire is used for a common reference line between all nodes on the network. The shield reduces the effect of electrostatic noise from the industrial environment on network communication.

The communication cable consists of a number of cable segments daisy-chained together. The total length of the cable segments cannot exceed 1219 m (4000 ft.). However, two segments can be used to extend the DH-485 network to 2438 m (8000 ft.). For additional information on connections using the AIC+, see the AIC+ Advanced Interface Converter User Manual, publication 1761-UM004.

When cutting cable segments, make them long enough to route them from one AIC+ to the next, with sufficient slack to prevent strain on the connector. Allow enough extra cable to prevent chafing and kinking in the cable.

Use these instructions for wiring the Belden #3106A or #9842 cable. See Cable Selection Guide on page 62 if you are using standard Allen-Bradley cables.

Connect the Communication Cable to the DH-485 Connector

We recommend a daisy-chained network. Do not make the incorrect connection that is shown in Figure 64.

Figure 64 - Daisy-chained Cables Connection Example

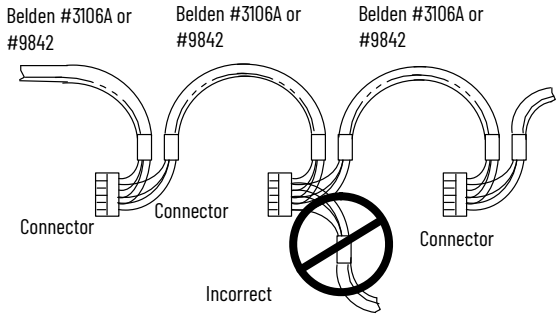

Single Cable Connection

When connecting a single cable to the DH-485 connector, use Figure 65.

Figure 65 - Single Cable Connection Example

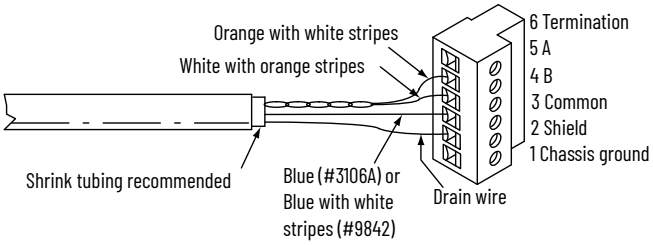

Multiple Cable Connection

When connecting multiple cables to the DH-485 connector, use Figure 66.

Figure 66 - Multiple Cable Connection Examples

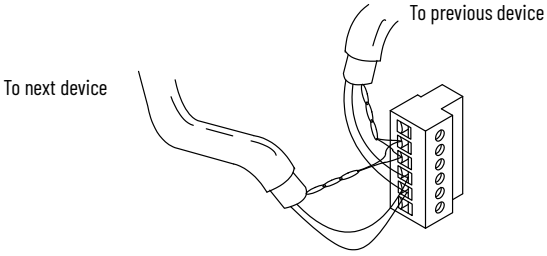

Table 9 - Connections using Belden #3106A Cable

For This Wire/Pair	Connect This Wire	To This Terminal
Shield/drain	Non-jacketed	Terminal 2 - Shield
Blue	Blue	Terminal 3 - Common
White/orange	White with orange stripe	Terminal 4 - Data B
	Orange with white stripe	Terminal 5 - Data A

Table 10 - Connections using Belden #9842 Cable

For This Wire/Pair	Connect This Wire	To This Terminal
Shield/drain	Non-jacketed	Terminal 2 - Shield
Blue/white	White with blue stripe	Cut back - no connection(1)
	Blue with white stripe	Terminal 3 - Common
White/orange	White with orange stripe	Terminal 4 - Data B
	Orange with white stripe	Terminal 5 - Data A

(1) To prevent confusion when installing the communication cable, cut back the white with blue stripe wire immediately after the insulation jacket is removed. This wire is not used by DH-485.

Ground and Terminate the DH-485 Network

Only one connector at the end of the link must have Terminals 1 and 2 jumpered together. This provides an earth ground connection for the shield of the communication cable.

Both ends of the network must have Terminals 5 and 6 jumpered together, as shown in Figure 67. This connects the termination impedance (of 120 Ω) that is built into each AIC+ as required by the DH-485 specification.

Figure 67 - End-of-Line Termination

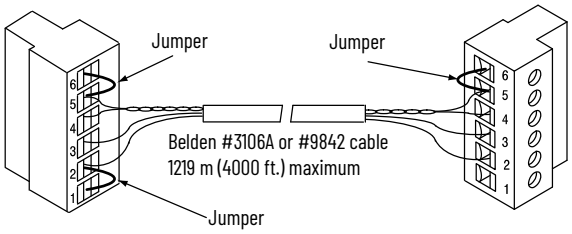

Connect the AIC+

The AIC+, catalog number 1761-NET-AIC, enables a MicroLogix 1200 controller to connect to a DH-485 network. The AIC+ has two RS-232 ports and one isolated RS-485 port. Typically, there is one AIC+ for each MicroLogix 1200 controller. When two MicroLogix controllers are closely positioned, you can connect a controller to each of the RS-232 ports on the AIC+.

The AIC+ can also be used as an RS-232 isolator, providing an isolation barrier between the MicroLogix 1200 communications port and any equipment connected to it (for example a computer or modem).

Figure 68 shows the external wiring connections and specifications of the AIC+.

Figure 68 - AIC+ External Wiring Connections

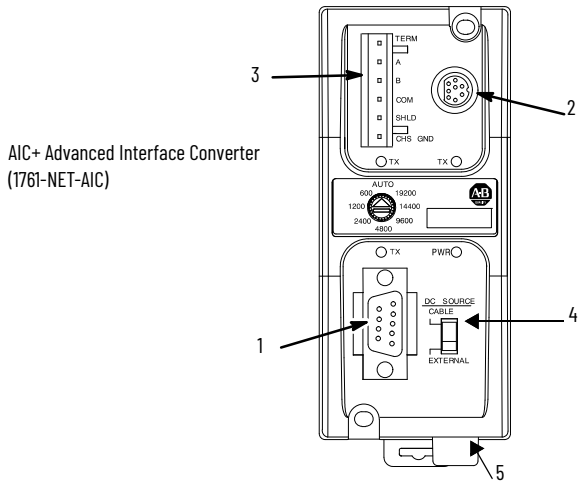

Item	Description
1	Port 1 - DB-9 RS-232, DTE
2	Port 2 - mini-DIN 8 RS-232 DTE
3	Port 3 - RS-485 Phoenix plug
4	DC Power Source selector switch (Cable = Port 2 power source, External = External power source connected to item 5)
5	Terminals for external 24V DC power supply and chassis ground

For additional information on connecting the AIC+, see the AIC+ Advanced Interface Converter User Manual, publication 1761-UM004.

Cable Selection Guide

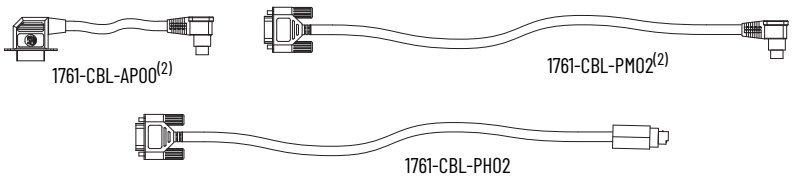

Cable	Length	Connections From	To AIC+	External Power Supply Required(1)	Power Selection Switch Setting(1)
1761-CBL-AP00(2) 1761-CBL-PM02(2) 1761-CBL-PH02	45 cm (17.7 in.) 2 m (6.5 ft.) 2 m (6.5 ft.)	SLC 5/03 or SLC 5/04 processors, ch 0	Port 2	Yes	External
		MicroLogix 1000, 1200, or 1500	Port 1	Yes	External
		PanelView 550 through NULL modem adapter	Port 2	Yes	External
		DTAM™ Plus / DTAM Micro™	Port 2	Yes	External
		PC COM port	Port 2	Yes	External

(1) An external power supply is required unless the AIC+ is powered by the device connected to port 2, then the selection switch should be set to cable.
(2) Series C or later cables are required.

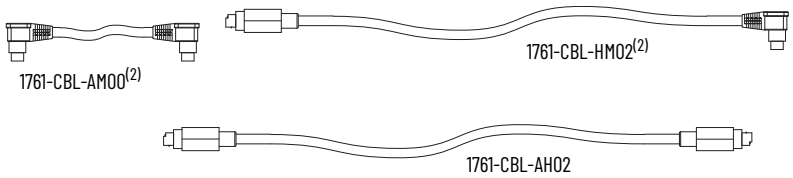

Cable	Length	Connections From	To AIC+	External Power Supply Required(1)	Power Selection Switch Settings
1761-CBL-AM00(2) 1761-CBL-HM02(2) 1761-CBL-AH02	45 cm (17.7 in.) 2 m (6.5 ft.) 2 m (6.5 ft.)	MicroLogix 1000, 1200, or 1500	Port 2	No	Cable
		To port 2 on another AIC+	Port 2	Yes	External

(1) An external power supply is required unless the AIC+ is powered by the device connected to port 2, then the selection switch should be set to cable.
(2) Series C or later cables are required.

Cable	Length	Connections From	To AIC+	External Power Supply Required(1)	Power Selection Switch Setting(1)
1747-CP3 1761-CBL-AC00(2)	3 m (9.8 ft.) 45 cm (17.7 in.)	SLC 5/03 or SLC 5/04 processor, channel 0	Port 1	Yes	External
		PC COM port	Port 1	Yes	External
		PanelView 550 through NULL modem adapter	Port 1	Yes	External
		DTAM Plus / DTAM Micro	Port 1	Yes	External
		Port 1 on another AIC+	Port 1	Yes	External

(1) An external power supply is required unless the AIC+ is powered by the device connected to port 2, then the selection switch should be set to cable.
(2) Series C or later cables are required.

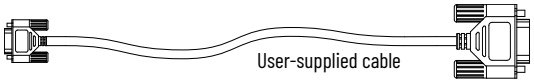

Cable	Length	Connections From	To AIC+	External Power Supply Required(1)	Power Selection Switch Setting(1)
Straight 9-pin to 25-pin	–	Modem or other communication device	Port 1	Yes	External

(1) An external power supply is required unless the AIC+ is powered by the device connected to port 2, then the selection switch should be set to cable.

Cable	Length	Connections From	To AIC+	External Power Supply Required(1)	Power Selection Switch Setting(1)
1761-CBL-AS03 1761-CBL-AS09	3 m (9.8 ft.) 9.5 m (31.17 ft.)	SLC™ 500 Fixed, SLC 5/01, SLC 5/02, and SLC 5/03 processors	Port 3	Yes	External
		PanelView 550 RJ45 port	Port 3	Yes	External

(1) An external power supply is required unless the AIC+ is powered by the device connected to port 2, then the selection switch should be set to cable.

1761-CBL-PM02 Series C (or equivalent) Cable Wiring Diagram

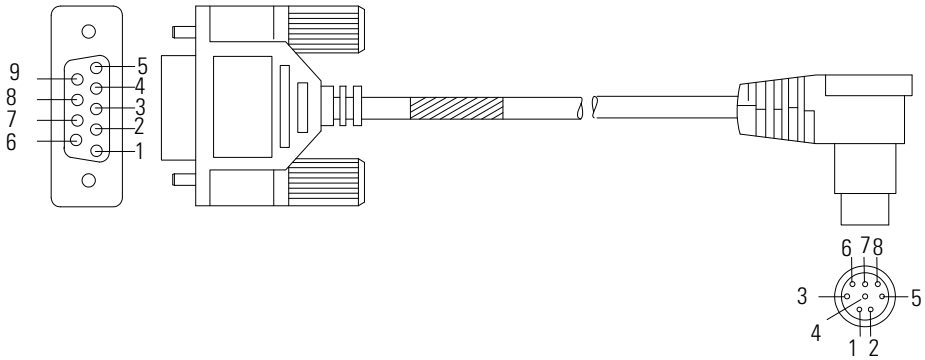

Programming Device

9-pin D-shell

Controller

8-pin mini-DIN

9	RI		
8	CTS	24V	1
7	RTS	GND	2
6	DSR	RTS	3
5	GND	RXD	4
4	DTR	DCD	5
3	TXD	CTS	6
2	RXD	TXD	7
1	DCD	GND	8

Recommended User-supplied Components

These components can be purchased from your local electronics supplier.

Table 11 - User-supplied Components

Component	Recommended Model
External power supply and chassis ground	Power supply rated for 20.4...28.8V DC
NULL modem adapter	Standard AT
Straight 9-pin to 25-pin RS-232 cable	See Figure 69 and Table 12 for port information if making your own cables.

Figure 69 - Port Pinout

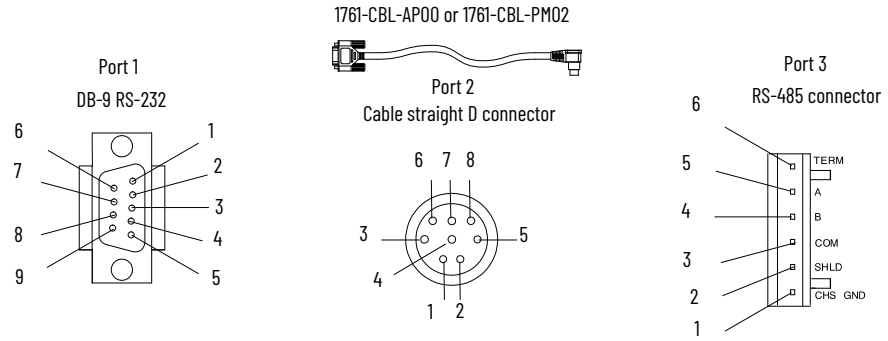

Table 12 - Cable Assignment

Pin	Port 1: DB-9 RS-232	Port 2[1]: (1761-CBL-PM02 cable)	Port 3: RS-485 Connector
1	Received line signal detector (DCD)	24V DC	Chassis ground
2	Received data (RxD)	Ground (GND)	Cable shield
3	Transmitted data (TxD)	Request to send (RTS)	Signal ground
4	DTE ready (DTR)[2]	Received data (RxD)[3]	DH-485 data B
5	Signal common (GND)	Received line signal detector (DCD)	DH-485 data A
6	DCE ready (DSR)[2]	Clear to send (CTS)[3]	Termination
7	Request to send (RTS)	Transmitted data (TxD)	Not applicable
8	Clear to send (CTS)	Ground (GND)	Not applicable
9	Not applicable	Not applicable	Not applicable

(1) An 8-pin mini-DIN connector is used for making connections to port 2. This connector is not commercially available. If you are making a cable to connect to port 2, you must configure your cable to connect to the Allen-Bradley cable shown above.
(2) On port 1, pin 4 is electronically jumpered to pin 6. Whenever the AIC+ is powered on, pin 4 matches the state of pin 6.
(3) In the 1761-CBL-PM02 cable, pins 4 and 6 are jumpered together within the DB-9 connector.

Safety Considerations

This equipment is suitable for use in Class I Division 2, Groups A, B, C, D or non-hazardous locations only.

WARNING: EXPLOSION HAZARD
AIC+ must be operated from an external power source.
This product must be installed in an enclosure. All cables connected to the product must remain in the enclosure or be protected by conduit or other means.

See Safety Considerations on page 13 for additional information.

Install and Attach the AIC+

1. Take care when installing the AIC+ in an enclosure so that the cable connecting the MicroLogix controller to the AIC+ does not interfere with the enclosure door.

2. Carefully plug the terminal block into the RS-485 port on the AIC+ you are putting on the network. Allow enough cable slack to prevent stress on the plug.
3. Provide strain relief for the Belden cable after it is wired to the terminal block. This guards against breakage of the Belden cable wires.

Power the AIC+

In normal operation with the MicroLogix programmable controller connected to port 2 of the AIC+, the controller powers the AIC+. Any AIC+ not connected to a MicroLogix controller requires a 24V DC power supply. The AIC+ requires 120 mA at 24V DC.

If both the controller and external power are connected to the AIC+, the power selection switch determines what device powers the AIC+.

ATTENTION: If you use an external power supply, it must be 24V DC (-15%/+20%). Permanent damage results if a higher voltage supply is used.

Set the DC Power Source selector switch to EXTERNAL before connecting the power supply to the AIC+. Figure 70 shows where to connect external power for the AIC+.

Figure 70 - External Power for AIC+

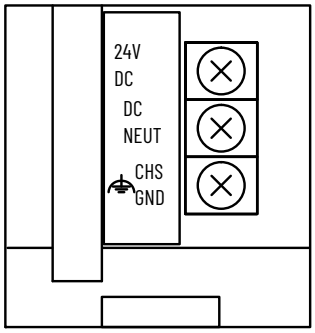

Bottom view

ATTENTION: Always connect the CHS GND (chassis ground) terminal to the nearest earth ground. This connection must be made whether or not an external 24V DC supply is used.

Power Options

There are two options for powering the AIC+:

- Use the 24V DC user power supply built into the MicroLogix 1200 controller. The AIC+ is powered through a hard-wired connection using a communication cable (1761-CBL-HM02, or equivalent) connected to port 2.
- Use an external DC power supply with the following specifications:
  - Operating voltage: 24V DC (-15%/+20%)
  - Output current: 150 mA minimum
  - Rated NEC Class 2

  Make a hard-wired connection from the external supply to the screw terminals on the bottom of the AIC+.

ATTENTION: If you use an external power supply, it must be 24V DC (-15%/+20%). Permanent damage results if miswired with the wrong power source.

Notes:

Use Trimpots

Trimpot Operation

The processor has two trimming potentiometers (trimpots) which allow modification of data within the controller. Adjustments to the trimpots change the value in the corresponding Trimpot Information (TPI) register. The data value of each trimpot can be used throughout the control program as timer, counter, or analog presets depending upon the requirements of the application.

The trimpots are located below the memory module port cover and to the right of the communications port, as shown in Figure 71.

Figure 71 - Location of Trimpots

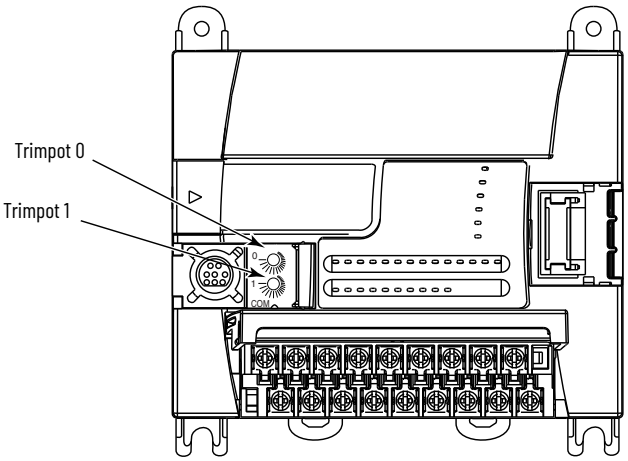

Use a small flathead screwdriver to turn the trimpots. Adjusting their value causes data to change within a range of 0...250 (fully clockwise). The maximum rotation of each trimpot is three-quarters, as shown in Figure 72. Trimpot stability over time and temperature is typically ±2 counts.

Figure 72 - Maximum Rotation of Trimpot

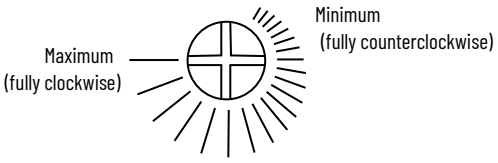

Trimpot file data is updated continuously whenever the controller is powered up.

Trimpot Information Function File

The composition of the TPI Function File is described in the MicroLogix 1200 and MicroLogix 1500 Programmable Controllers Instruction Set Reference Manual, publication 1762-RM001.

Error Conditions

Error conditions of the TPI Function File are described in the MicroLogix 1200 and MicroLogix 1500 Programmable Controllers Instruction Set Reference Manual, publication 1762-RM001.

Notes:

Use Real-time Clock and Memory Modules

For more information on 'Real-time Clock Function File' and 'Memory Module Information File', see the MicroLogix 1200 and MicroLogix 1500 Programmable Controllers Instruction Set Reference Manual, publication 1762-RM001.

Three modules with different levels of functionality are available for use with the MicroLogix 1200 controller.

Catalog Number	Function
1762-RTC	Real-time Clock
1762-MM1	Memory Module
1762-MM1RTC	Memory Module and Real-time Clock

Real-time Clock Operation

Removal/Insertion Under Power

At power-up and when the controller enters a run or test mode, the controller determines if a real-time clock module (RTC) is present. If an RTC is present, its values (date, time, and status) are written to the RTC Function File in the controller.

The RTC module can be installed or removed at any time without risk of damage to either the module or the controller. If an RTC is installed while the MicroLogix 1200 controller is in a run or test mode, the module is not recognized until either a power cycle occurs or until the controller is placed in a non-executing mode (program mode, suspend mode, or fault condition).

Removal of the RTC during run mode is detected within one program scan. Removal of the RTC while in run mode causes the controller to write zeros to the RTC Function File.

Table 13 indicates the accuracy of the RTC for various temperatures.

Table 13 - RTC Accuracy

Ambient Temperature	Accuracy[1]
0 °C (+32 °F)	+34...-70 seconds/month
+25 °C (+77 °F)	+36...-68 seconds/month
+40 °C (+104 °F)	+29...-75 seconds/month
+55 °C (+131 °F)	-133...-237 seconds/month

(1) These numbers are maximum worst case values over a 31-day month.

Write Data to the Real-time Clock

When valid data is sent to the real-time clock from the programming device or another controller, the new values take effect immediately.

The real-time clock does not allow you to load or store invalid date or time data.

Use the Disable Clock button in your RSLogix programming software to disable the real-time clock before storing a module. This decreases the drain on the RTC battery during storage.

RTC Battery Operation

The real-time clock has an internal battery that is not replaceable. The RTC Function File features a battery low indicator bit (RTC:0/BL), which shows the status of the RTC battery. When the battery is low, the indicator bit is set (1). This means that the battery may fail within 14 days and the real-time clock module needs to be replaced. When the battery low indicator bit is clear (0), the battery level is acceptable or a real-time clock is not attached.

If the RTC battery is low and the controller is powered, the RTC operates normally. If the controller power is removed and the RTC battery is low, RTC data is lost.

Life Span	Operating Temperature	Storage Temperature(1)
5 years	0...40 °C (32...104 °F)	-40...+60 °C (-40...+140 °F)

(1) Stored for six months.

ATTENTION: Operating with a low battery indication for more than 14 days may result in invalid RTC data unless power is on continuously.

Memory Module Operation

The memory module supports the following features:

- User Program and Data Back-up
- User Program Compare
- Data File Download Protection
- Memory Module Write Protection
- Removal/Insertion Under Power

ATTENTION: Electrostatic discharge can damage the memory module. Do not touch the connector pins or other sensitive areas.

User Program and Data Back-up

The memory module provides a simple and flexible program/data transport mechanism, allowing the user to transfer the program and data to the controller without the use of a personal computer and programming software.

The memory module can store one user program at a time.

During program transfers to or from the memory module, the controller's RUN LED flashes.

Program Compare

The memory module can also provide application security, allowing you to specify that if the program stored in the memory module does not match the program in the controller, the controller will not enter an executing (run or test) mode. To enable this feature, set the S:2/9 bit in the system status file. See 'Status System File' in the MicroLogix 1200 and MicroLogix 1500 Programmable Controllers Instruction Set Reference Manual, publication 1762-RM001 for more information.

Data File Download Protection

The memory module supports data file download protection. This allows user data to be saved (not overwritten) during a download.

Data file download protection is only functional if the processor does not have a fault, size of all protected data files in the memory module exactly match the size of protected data files within the controller, and all protected data files are of the same type. See 'Protecting Data Files During Download' in the MicroLogix 1200 and MicroLogix 1500 Programmable Controllers Instruction Set Reference Manual, publication 1762-RM001.

Memory Module Write Protection

The memory module supports write-once, read-many behavior. Write protection is enabled using your programming software.

IMPORTANT	Once set, write protection cannot be removed. A change cannot be made to the control program stored in a write-protected memory module. If a change is required, use a different memory module.

Removal/Insertion Under Power

The memory module can be installed or removed at any time without risk of damage to either the memory module or the controller, except during a data transaction. If the memory module is removed during a data transaction, data corruption can occur.

If a memory module is installed while the MicroLogix 1200 controller is executing, the memory module is not recognized until either a power cycle occurs, or until the controller is placed in a non-executing mode (program mode, suspend mode, or fault condition).

Notes:

Specifications

Controller Specifications

General Specifications

Attribute		1762-L24AWA 1762-L24AWAR	1762-L24BWA 1762-L24BWAR	1762-L24BXB 1762-L24BXBR	1762-L40AWA 1762-L40AWAR	1762-L40BWA 1762-L40BWAR	1762-L40BXB 1762-L40BXBR
Dimensions		Height: 90 mm (3.54 in.), 104 mm (4.09 in.) (with DIN latch open) Width: 110 mm (4.33 in.) Depth: 87 mm (3.42 in.)			Height: 90 mm (3.54 in.), 104 mm (4.09 in.) (with DIN latch open) Width: 160 mm (6.30 in.) Depth: 87 mm (3.42 in.)		
Shipping weight		0.9 kg (2.0 lbs)			1.1 kg (2.4 lbs)		
Number of I/O		14 inputs, 10 outputs			24 inputs, 16 outputs		
Power supply voltage		100...240V AC (-15%, +10%) @ 47...63 Hz		24V DC (-15%, +10%) Class 2, SELV	100...240V AC (-15%, +10%) @ 47...63 Hz		24V DC (-15%, +10%) Class 2, SELV
Heat dissipation		15.2 W	15.7 W	17.0 W	21.0 W	22.0 W	27.9 W
Power supply inrush current		120V AC: 25 A for 8 ms 240V AC: 40 A for 4 ms		24V DC: 15 A for 20 ms	120V AC: 25 A for 8 ms 240V AC: 40 A for 4 ms		24V DC: 15 A for 30 ms
Power supply usage		68VA	70VA	27 W	80VA	82VA	40 W
Power supply output	5V DC	400 mA	400 mA(1)	400 mA	600 mA	600 mA(2)	600 mA
	24V DC	350 mA	350 mA(1)	350 mA	500 mA	500 mA(2)	500 mA
Sensor power output		none	250 mA @ 24V DC AC Ripple < 500 mV peak-to-peak 400 µF max.(1)	none	none	400 mA @ 24V DC AC Ripple < 500 mV peak-to-peak 400 µF max.(2)	none
Input circuit type		120V AC	24V DC sinking/sourcing	24V DC sinking/sourcing	120V AC	24V DC sinking/sourcing	24V DC sinking/sourcing
Output circuit type		Relay	Relay	Relay/FET	Relay	Relay	Relay/FET
Terminal screw torque		0.791 N•m (7 lb•in) rated					

(1) Do not allow the total load power consumed by the 5V DC, 24V DC, and sensor power outputs to exceed 12 W.
(2) Do not allow the total load power consumed by the 5V DC, 24V DC, and sensor power outputs to exceed 16 W.
See System Loading and Heat Dissipation on page 105 for system validation worksheets.

Input Specifications

Attribute	1762-L24AWA 1762-L40AWA 1762-L24AWAR 1762-L40AWAR	1762-L24BWA, 1762-L24BXB, 1762-L40BWA, 1762-L40BXB 1762-L24BWAR, 1762-L24BXBR, 1762-L40BWAR, 1762-L40BXBR	
		Inputs 0...3	Inputs 4 and Higher
On-state voltage range	79...132V AC	14...24V DC (+10% @ 55 °C/131 °F) (+25% @ 30 °C/86 °F)	10...24V DC (+10% @ 55 °C/131 °F) (+25% @ 30 °C/86 °F)
Off-state voltage range	0...20V AC	0...5V DC	
Operating frequency	47...63 Hz	0 Hz...20 kHz	0 Hz...1 kHz (scan time dependent)
On-state current: Minimum Nominal Maximum	 5.0 mA @ 79V AC 12 mA @ 120V AC 16.0 mA @ 132V AC	 2.5 mA @ 14V DC 7.3 mA @ 24V DC 12.0 mA @ 30V DC	 2.0 mA @ 10V Dc 8.9 mA @ 24V Dc 12.0 mA @ 30V DC
Off-state leakage current	2.5 mA max.	1.5 mA min.	
Nominal impedance	12 kΩ @ 50 Hz 10 kΩ @ 60 Hz	3.3 kΩ	2.7 kΩ
Inrush current @ 120V AC, max	250 mA	Not applicable	

Output Specifications

Attribute		1762-L24AWA 1762-L24BWA 1762-L24AWAR 1762-L24BWAR	1762-L24BXB 1762-L24BXBR	1762-L40AWA 1762-L40BWA 1762-L40AWAR 1762-L40BWAR	1762-L40BXB 1762-L40BXBR
Relay and FET Outputs					
Controlled load, max		1440VA	–	1440VA	1440VA
Continuous current, max					
Current per group common		8 A	7.5 A	8 A	8 A
Current per controller	@ 150V max	30 A or total of per-point loads, whichever is less			
	@ 240V max	20 A or total of per-point loads, whichever is less			
Relay Outputs					
Turn on time/Turn off time, min		10 ms(1)			
Relay life - Electrical		See Figure 73			
Relay life - Mechanical		20,000,000 cycles			
Load current, min		10 mA			

(1) Scan time dependent

Relay Contact Ratings

Maximum Volts	Amperes		Amperes Continuous	Voltamperes	
	Make	Break		Make	Break
240V AC	7.5 A	0.75 A	2.5 A(1)	1800VA	180VA
120V AC	15 A	1.5 A	2.5 A(1)	1800VA	180VA
125V DC	0.22 A(2)		1.0 A	28VA	
24V DC	1.2 A(2)		2.0 A		

(1) 1.5 A above 40 °C (104 °F).
(2) For DC voltage applications, the make/break ampere rating for relay contacts can be determined by dividing 28VA by the applied DC voltage. For example, 28VA/48V DC = 0.58 A. For DC voltage applications less than 14V, the make/break ratings for relay contacts cannot exceed 2 A.

ATTENTION: Do not exceed the "Current per group common" specification.

Figure 73 - Relay Life Chart

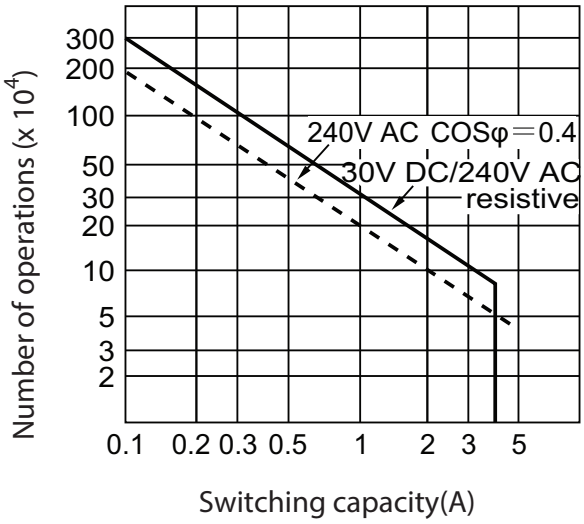

BXB FET Output Specifications

Attribute	General Operation	High Speed Operation[1] (Output 2 Only)
Power supply voltage	24V DC (-15%, +10%)	
On-state voltage drop: At maximum load current At maximum surge current	 1V DC 2.5V DC	 Not applicable Not applicable
Current rating per point: Maximum load Minimum load Maximum leakage	 See graphs below. 1.0 mA 1.0 mA	 100 mA 10 mA 1.0 mA

Maximum output current (temperature dependent):

FET Current per Point
(1762-L24BXB, L40BXB, 1762-L24BXBR, L40BXBR)

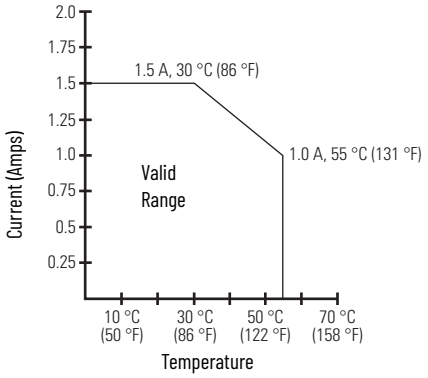

FET Total Current
(1762-L40BXB and L40BXBR)

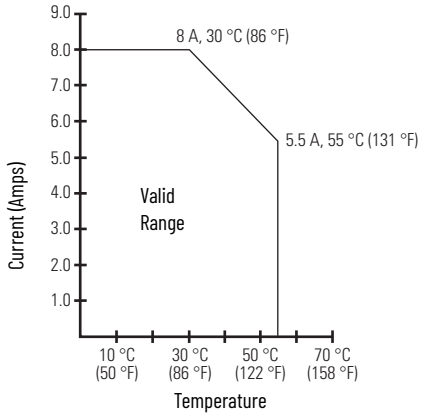

Surge current per point: Peak current Maximum surge duration Maximum rate of repetition @ 30 °C (86 °F) Maximum rate of repetition @ 55 °C (131 °F)	 4.0 A 10 ms Once every second Once every 2 seconds	 Not applicable Not applicable Not applicable Not applicable
Turn-on time, max	0.1 ms	6 µs
Turn-off time, max	1.0 ms	18 µs
Repeatability, max	Not applicable	2 µs
Drift, max	Not applicable	1 µs per 5 °C (41 °F)

(1) Output 2 is designed to provide increased functionality over the other FET outputs. Output 2 may be used like the other FET transistor outputs, but in addition, within a limited current range, it may be operated at a higher speed. Output 2 also provides a pulse train output (PTO) or pulse width modulation output (PWM) function.

AC Input Filter Settings

Nominal Filter Setting (ms)	On-delay (ms)		Off-delay (ms)	
	Minimum	Maximum	Minimum	Maximum
8	2	20	10	20

Fast DC Input Filter Settings (Inputs 0...3)

Nominal Filter Setting (ms)	On-delay (ms)		Off-delay (ms)		Maximum Counter Frequency 50% Duty Cycle
	Minimum	Maximum	Minimum	Maximum	
0.025	0.005	0.025	0.005	0.025	20.0 kHz
0.075	0.040	0.075	0.045	0.075	6.7 kHz
0.100	0.050	0.100	0.060	0.100	5.0 kHz
0.250	0.170	0.250	0.210	0.250	2.0 kHz
0.500	0.370	0.500	0.330	0.500	1.0 kHz
1.00	0.700	1.000	0.800	1.000	0.5 kHz
2.000	1.700	2.000	1.600	2.000	250 Hz

Fast DC Input Filter Settings (Inputs 0...3) (Continued)

Nominal Filter Setting (ms)	On-delay (ms)		Off-delay (ms)		Maximum Counter Frequency 50% Duty Cycle
	Minimum	Maximum	Minimum	Maximum	
4.000	3.400	4.000	3.600	4.000	125 Hz
8.000(1)	6.700	8.000	7.300	8.000	63 Hz
16.000	14.000	16.000	14.000	16.000	31 Hz

(1) This is the default setting.

Normal DC Input Filter Settings (Inputs 4 and Higher)

Nominal Filter Setting (ms)	On-delay (ms)		Off-delay (ms)		Maximum Frequency 50% Duty Cycle
	Minimum	Maximum	Minimum	Maximum	
0.500	0.090	0.500	0.020	0.500	1.0 kHz
1.000	0.500	1.000	0.400	1.000	0.5 kHz
2.000	1.100	2.000	1.300	2.000	250 Hz
4.000	2.800	4.000	2.700	4.000	125 Hz
8.000(1)	5.800	8.000	5.300	8.000	63 Hz
16.000	11.000	16.000	10.000	16.000	31 Hz

(1) This is the default setting.

Working Voltage – 1762-L24AWA, 1762-L40AWA, 1762-L24AWAR, 1762-L40AWAR

Attribute	Value
Power supply input to backplane isolation	Verified by one of the following dielectric tests: 1836V AC for 1 second or 2596V DC for 1 second
	265V AC Working Voltage (IEC Class 2 reinforced insulation)
Input group to backplane isolation	Verified by one of the following dielectric tests: 1517V AC for 1 second or 2145V DC for 1 second
	132V AC Working Voltage (IEC Class 2 reinforced insulation)
Input group to input group isolation	Verified by one of the following dielectric tests: 1517V ACfor 1 second or 2145V DC for 1 second
	132V AC Working Voltage (basic insulation)
Output group to backplane isolation	Verified by one of the following dielectric tests: 1836V AC for 1 second or 2596V DC for 1 second
	265V AC Working Voltage (IEC Class 2 reinforced insulation)
Output group to output group isolation	Verified by one of the following dielectric tests: 1836V AC for 1 second or 2596V DC for 1 second
	265V AC Working Voltage (basic insulation) 150V AC Working Voltage (IEC Class 2 reinforced insulation).

Working Voltage – 1762-L24BWA, 1762-L40BWA, 1762-L24BWAR, 1762-L40BWAR

Attribute	Value
Power supply input to backplane isolation	Verified by one of the following dielectric tests: 1836V AC for 1 second or 2596V AC for 1 second
	265V AC Working Voltage (IEC Class 2 reinforced insulation)
Input group to backplane isolation and input group to input group isolation	Verified by one of the following dielectric tests: 1200V AC for 1 second or 1697V DC for 1 second
	75V DC Working Voltage (IEC Class 2 reinforced insulation)
Output group to backplane isolation	Verified by one of the following dielectric tests: 1836V AC for 1 second or 2596V DC for 1 second
	265V AC Working Voltage (IEC Class 2 reinforced insulation)
Output group to output group isolation	Verified by one of the following dielectric tests: 1836V AC for 1 second or 2596V DC for 1 second
	265V AC Working Voltage (basic insulation) 150V Working Voltage (IEC Class 2 reinforced insulation)

Working Voltage – 1762-L24BXB, 1762-L40BXB, 1762-L24BXBR, 1762-L40BXBR

Attribute	Value
Input group to backplane isolation and input group to input group isolation	Verified by one of the following dielectric tests: 1200V AC for 1 second or 1697V DC for 1 second
	75V DC Working Voltage (IEC Class 2 reinforced insulation)
FET output group to backplane isolation	Verified by one of the following dielectric tests: 1200V AC for 1 second or 1697V DC for 1 second
	75V DC Working Voltage (IEC Class 2 reinforced insulation)

Working Voltage – 1762-L24BXB, 1762-L40BXB, 1762-L24BXBR, 1762-L40BXBR (Continued)

Attribute	Value
Relay output group to backplane isolation	Verified by one of the following dielectric tests: 1836V AC for 1 second or 2596V DC for 1 second
	265V AC Working Voltage (IEC Class 2 reinforced insulation).
Relay output group to relay output group and FET output group isolation	Verified by one of the following dielectric tests: 1836V AC for 1 second or 2596V DC for 1 second
	265V AC Working Voltage (basic insulation) 150V Working Voltage (IEC Class 2 reinforced insulation)

Environmental Specifications

Attribute	1762-L24AWA 1762-L24AWAR	1762-L24BWA 1762-L24BWAR	1762-L24BXB 1762-L24BXBR	1762-L40AWA 1762-L40AWAR	1762-L40BWA 1762-L40BWAR	1762-L40BXB 1762-L40BXBR
Temperature, operating	0...55 °C (32...131 °F) ambient					
Temperature, storage	-40...+85 °C (-40...+185 °F) ambient					
Operating humidity	5...95% relative humidity (non-condensing)					
Vibration	Operating: 10...500 Hz, 5 G, 0.030 in. max. peak-to-peak, 2 hours each axis Relay Operation: 1.5 G					
Shock	Operating: 30 G; 3 pulses each direction, each axis Relay Operation: 7 G Non-Operating: 50 G panel mounted (40 G DIN Rail mounted); 3 pulses each direction, each axis					
Agency certification	UL 508 C-UL under CSA C22.2 no. 142 Class I Div. 2, Groups A, B, C, D (UL 1604, C-UL under CSA C22.2 no. 213) CE/RCM compliant for all applicable directives					
Electrical/EMC	The controller has passed testing at the following levels: EN 61000-4-2: 4 kV contact, 8 kV air, 4 kV indirect EN 61000-4-3: 10V/m, 80 to 1000 MHz, 80% amplitude modulation, +900 MHz keyed carrier EN 61000-4-4: 2 kV, 5 kHz; communications cable: 1 kV, 5 kHz EN 61000-4-5: communications cable 1 kV galvanic gun I/O: 2 kV CM (common mode), 1 kV DM (differential mode) AC Power Supply: 4 kV CM (common mode), 2 kV DM (differential mode) DC Power Supply: 500V CM (common mode), 500V DM (differential mode) EN 61000-4-6: 10V, communications cable 3V					

Expansion I/O Specifications

Discrete I/O Modules

General Specifications – Discrete I/O Modules

Attribute	Value
Dimensions	Height: 90 mm (3.54 in.), 110 mm (4.33 in.) (including mounting tabs) Width: 87 mm (3.43 in.) Depth: 40.4 mm (1.59 in.)
Enclosure type rating	None (open-style)

Input Specifications – 1762-IA8, 1762-IQ8, 1762-IQ16, 1762-IQ32T, 1762-IQ80W6

Attribute	1762-IA8	1762-IQ8	1762-IQ16	1762-IQ32T	1762-IQ80W6
Shipping weight, approx. (with carton)	209 g (0.46 lbs.)	200 g (0.44 lbs.)	230 g (0.51 lbs.)	200g (0.44 lbs.)	280g (0.62 lbs.)
Voltage category	100/120V AC	24V DC (sinking/sourcing)(1)	24V DC (sinking/sourcing)(1)	24V DC (sinking/sourcing)(1)	24V DC (sinking/sourcing)(1)
Operating voltage range	79...132V AC at 47...63 Hz	10...30V DC at 30 °C (86 °F) 10...26.4V DC at 55 °C (131 °F)	10...30V DC 10...26.4V DC(2)(3)	10...30V DC (24 points) at 30 °C (86 °F) 10...26.4V DC (23 points) at 60 °C (140 °F)	10...30V DC at 30 °C (86 °F) 10...26.4V DC at 65 °C (149 °F)
Number of inputs	8	8	16	32	8
Bus current draw, max	50 mA at 5V DC (0.25 W)	50 mA at 5V DC (0.25 W)	70 mA at 5V DC (0.35 W) (3)	170 mA at 5V DC 0 mA at 24V DC	110 mA at 5V DC 80 mA at 24V DC

Input Specifications – 1762-IA8, 1762-IQ8, 1762-IQ16, 1762-IQ32T, 1762-IQ8OW6 (Continued)

Attribute	1762-IA8	1762-IQ8	1762-IQ16	1762-IQ32T	1762-IQ8OW6
Heat dissipation, max	2.0 W	3.7 W	4.3 W at 26.4V DC 5.4 W at 30V DC(3)	5.4 W at 26.4V DC 6.8 W at 30V DC	5.0 W at 30V DC 4.4 W at 26.4V DC (The Watts per point, plus the min W, with all points energized)
Signal delay, max	On delay: 20.0 ms Off delay: 20.0 ms	On delay: 8.0 ms Off delay: 8.0 ms	On delay: 8.0 ms Off delay: 8.0 ms	On delay: 8.0 ms Off delay: 8.0 ms	On delay: 8.0 ms Off delay: 8.0 ms
Off-state voltage, max	20V AC	5V DC	5V DC	5V DC	5V DC
Off-state current, max	2.5 mA	1.5 mA	1.5 mA	1.0 mA	1.5 mA
On-state voltage, min	79V AC (min) 132V AC (max)	10V DC	10V DC	10V DC	10V DC
On-state current	5.0 mA min at 79V AC 47 Hz 12.0 mA nom. at 120V AC 60 Hz 16.0 mA max at 132V AC 63 Hz	2.0 mA min at 10V DC 8.0 mA nom. at 24V DC 12.0 mA max at 30V DC	2.0 mA min at 10V DC 8.0 mA nom. at 24V DC 12.0 mA max at 30V DC	1.6 mA min at 10V DC 2.0 mA min at 15V DC 5.7 mA max at 26.4V DC 6.5 mA max at 30.0V DC	10 mA at 5V DC
Inrush current, max	250 mA	Not applicable	Not applicable	Not applicable	250 mA
Nominal impedance	12 kΩ at 50 Hz 10 kΩ at 60 Hz	3 kΩ	3 kΩ	4.7 kΩ	3 kΩ
IEC input compatibility	Type 1+	Type 1+	Type 1+	Type 1	Type 1+
Isolated groups	Group 1: inputs 0...7 (internally connected commons)	Group 1: inputs 0...7 (internally connected commons)	Group 1: inputs 0...7; Group 2: inputs 8...15	Group 1: Inputs 0...7; Group 2: Inputs 8...15; Group 3: Inputs 16...23; Group 4: Inputs 24...31	Group 1: inputs 0...3; Group 2: inputs 4...7
Input group to backplane isolation	Verified by one of the following dielectric tests: 1517V AC for 1 s or 2145V DC for 1 s 132V AC working voltage (IEC Class 2 reinforced insulation)	Verified by one of the following dielectric tests: 1200V ACAC for 1 s or 1697V DC for 1 s 75V DC working voltage (IEC Class 2 reinforced insulation)	Verified by one of the following dielectric tests: 1200V AC for 1 s or 1697V DC for 1 s 75V DC working voltage (IEC Class 2 reinforced insulation)	Verified by one of the following dielectric tests: 1200V AC for 2 s or 1697V DC for 2 s 75V DC working voltage (IEC Class 2 reinforced insulation)	Verified by one of the following dielectric tests: 1200V AC for 1 s or 1697V DC for 1 s 75V DC working voltage (IEC Class 2 reinforced insulation)
Vendor ID code	1				
Product type code	7				
Product code	114	96	97	99	98

(1) Sinking/Sourcing Inputs – Sinking/sourcing describes the current flow between the I/O module and the field device. Sourcing I/O circuits supply (source) current to sinking field devices. Sinking I/O circuits are driven by a current sourcing field device. Field devices connected to the negative side (DC Common) of the field power supply are sinking field devices. Field devices connected to the positive side (+V) of the field supply are sourcing field devices.
(2) For derating chart, see MicroLogix 1762-IQ16 DC Input Module Installation Instructions, publication 1762-IN010.
(3) Only applicable for series B and series C I/O modules.

Output Specifications – 1762-OA8, 1762-OB8, 1762-OB16, 1762-OB32T, 1762-OV32T

Attribute	1762-OA8	1762-OB8	1762-OB16	1762-OB32T	1762-OV32T
Shipping weight, approx. (with carton)	215 g (7.58 oz.)	210 g (7.41 oz.)	235 g (8.29 oz.)	200 g (7.05 oz.)	200 g (7.05 oz.)
Voltage category	100...240V AC	24V DC	24V DC	24V DC sourcing	24V DC sinking
Operating voltage range	85...265V AC at 47...63 Hz	20.4...26.4V DC	20.4...26.4V DC	10.2...26.4V DC	10.2...26.4V DC
Number of outputs	8	8	16	32	32
Bus current draw, max	115 mA at 5V DC (0.575 W)	115 mA at 5V DC (0.575 W)	175 mA at 5V DC (0.88 W)	175 mA at 5V DC 0 mA at 24V DC	175 mA at 5V DC 0 mA at 24V DC
Heat dissipation, max	2.9 W	1.61 W	2.9 W at 30 °C (86 °F) 2.1 W at 55 °C (131 °F)	3.4 W at 26.4 DC	2.7 W at 26.4V DC
Signal delay, max – resistive load	On delay: 1/2 cycle Off delay: 1/2 cycle	On delay: 0.1 ms Off delay: 1.0 ms	On delay: 0.1 ms Off delay: 1.0 ms	On delay: 0.5 ms Off delay: 4.0 ms	On delay: 0.5 ms Off delay: 4.0 ms
Off-state leakage current, max	2 mA at 132V 2.5 mA at 265V	1.0 mA	1.0 mA	0.1 mA at 26.4V DC	0.1 mA at 26.4V DC
On-state current, min	10 mA	1.0 mA	1.0 mA	1.0 mA	1.0 mA
On-state voltage drop, max	1.5V at 0.5 A	1.0V DC	1.0V DC	0.3V DC at 0.5 A	0.3V DC at 0.5 A
Continuous current per point, max	0.25 A at 55 °C (131 °F) 0.5 A at 30 °C (86 °F)	0.5 A at 55 °C (131 °F) 1.0 A at 30 °C (86 °F)	0.5 A at 55 °C (131 °F) 1.0 A at 30 °C (86 °F)	0.5 A at 60 °C (140 °F)	0.5 A at 60 °C (140 °F)
Continuous current per common, max	1.0 A at 55 °C (131 °F) 2.0 A at 30 °C (86 °F)	4.0 A at 55 °C (131 °F) 8.0 A at 30 °C (86 °F)	4.0 A at 55 °C (131 °F) 8.0 A at 30 °C (86 °F)	2.0 A at 60 °C (140 °F)	2.0 A at 60 °C (140 °F)

Output Specifications – 1762-OA8, 1762-OB8, 1762-OB16, 1762-OB32T, 1762-OV32T (Continued)

Attribute	1762-OA8	1762-OB8	1762-OB16	1762-OB32T	1762-OV32T
Continuous current per module, max	2.0 A at 55 °C (131 °F) 4.0 A at 30 °C (86 °F)	4.0 A at 55 °C (131 °F) 8.0 A at 30 °C (86 °F)	4.0 A at 55 °C (131 °F) 8.0 A at 30 °C (86 °F)	4.0 A at 60 °C (140 °F)	4.0 A at 60 °C (140 °F)
Surge current, max	5.0 A (Repeatability is once every 2 s for a duration of 25 ms.	2.0 A (Repeatability is once every 2 s at 55 °C (131 °F), once every second at 30 °C (86 °F) for a duration of 10 ms.)	2.0 A (Repeatability is once every 2 s at 55 °C (131 °F), once every second at 30 °C (86 °F) for a duration of 10 ms.)	2.0 A (Repeatability is once every 2 s at 60 °C (140 °F) for 10 ms)	2.0 A (Repeatability is once every 2 s at 60 °C (140 °F) for 10 ms)
Isolated groups	Group 1: Outputs 0...3 Group 2: Outputs 4...7	Group 1: Outputs 0...7	Group 1: Outputs 0...15	Group 1: Outputs 0...15 Group 2: Outputs 16...31 (internally connected to common)	
Output group to backplane isolation	Verified by one of the following dielectric tests: 1836V AC for 1 s or 2596V DC for 1 s 265V AC working voltage (IEC Class 2 reinforced insulation)	Verified by one of the following dielectric tests: 1200V AC for 1 s or 1697V DC for 1 s 75V DC working voltage (IEC Class 2 reinforced insulation)		Verified by one of the following dielectric tests: 1200V AC for 2 s or 1697V DC for 2 s 75V DC working voltage (IEC Class 2 reinforced insulation)	
Output group to output group isolation	Verified by one of the following dielectric tests: 1836V AC for 1 s or 2596V DC for 1 s 265V AC working voltage (IEC Class 2 reinforced insulation)	Not applicable		Verified by one of the following dielectric tests: 1200V AC for 2 s or 1697V DC for 2 s 75V DC working voltage (IEC Class 2 reinforced insulation)	
Vendor ID code	1				
Product type code	7				
Product code	119	101	103	100	102

Output Specifications – 1762-OW8, 1762-OW16, 1762-OX6I, 1762-IQ8OW6

Attribute	1762-OW8	1762-OW16	1762-OX6I	1762-IQ8OW6
Shipping weight, approx. (with carton)	228 g (0.50 lbs.)	285 g (0.63 lbs.)	220 g (0.485 lbs)	280 g (0.62 lbs.)
Voltage category	AC/DC normally open relay	AC/DC normally open relay	AC/DC Type C Relay	AC/DC normally open relay
Operating voltage range	5...265V AC 5...125V DC	5...265V AC 5...125V DC	5...265V AC 5...125V DC	5...265V AC 5...125V DC
Number of outputs	8	16	6	6
Bus current draw, max	80 mA at 5V DC (0.40 W) 90 mA at 24V DC (2.16 W)	140 mA at 5V DC (0.70 W)(1) 180 mA at 24V DC (4.32 W) (1)	110 mA at 5V DC (0.55 W) 110 mA at 24V DC (2.64 W)	110 mA at 5V DC 80 mA at 24V DC
Heat dissipation, max	2.9 W	6.1 W(1)	2.8 W	5.0 W at 30V DC 4.4 W at 26.4V DC (The Watts per point, plus the min W, with all points energized)
Signal delay, max – resistive load	On Delay: 10 ms Off Delay: 10 ms	On Delay: 10 ms Off Delay: 10 ms	On Delay: 10 ms (max) 6 ms (typical) Off Delay: 20 ms (max) 12 ms (typical)	On-delay: 10 ms (max) Off-delay: 10 ms (max)
Off-state leakage, max	0 mA	0 mA	0 mA	0 mA
On-state current, min	10 mA	10 mA	100 mA	10 mA
On-state voltage drop, max	Not Applicable			
Continuous current per point, max	2.5 A. See Table 14		7 A See Table 15.	2.5 A See Table 14.
Continuous current per common, max	8 A	8 A	7 A See Table 15.	8 A
Continuous current per module, max	16 A	16 A	30 A See Table 16.	8 A
Surge current, max	See Table 14.		See Table 15.	See Table 14.
Isolated groups	Group 1: Outputs 0...3 Group 2: Outputs 4...7	Group 1: Outputs 0...7 Group 2: Outputs 8...15	All 6 Outputs Individually Isolated.	Group 3: Outputs 0...5
Output group to backplane isolation	Verified by one of the following dielectric tests: 1836V AC for 1 s or 2596V DC for 1 s 265V AC working voltage (IEC Class 2 reinforced insulation)			

Output Specifications – 1762-OW8, 1762-OW16, 1762-OX6I, 1762-IQ8OW6 (Continued)

Attribute	1762-OW8	1762-OW16	1762-OX6I	1762-IQ8OW6
Output group to output group isolation	Verified by one of the following dielectric tests: 1836V AC for 1 s or 2596V DC for 1 s 265V AC working voltage (basic insulation) 150V AC working voltage (IEC Class 2 reinforced insulation)			
Vendor ID code	1			
Product type code	7			
Product code	120	121	124	98

(1) Only applicable for series B and series C I/O modules.

Table 14 - Relay Contact Ratings – 1762-OW8, 1762-OW16, and 1762-IQ8OW6

Maximum Volts	Amperes Continuous	Amperes		Voltamperes	
		Make	Break	Make	Break
240V AC	2.5 A(1)	7.5 A	0.75 A	1800VA	180VA
120V AC	2.5 A(1)	15 A	1.5 A	1800VA	180VA
125V DC	1.0 A	0.22 A(2)		28VA	
24V DC	2.0 A	1.2 A(2)			

(1) 1.5 A above 40 °C (104 °F).
(2) For DC voltage applications, the make/break ampere rating for relay contacts can be determined by dividing 28VA by the applied DC voltage. For example, 28VA/48V DC = 0.58 A. For DC voltage applications less than 14V, the make/break ratings for relay contacts cannot exceed 2 A.

Table 15 - Relay Contact Ratings – 1762-OX6I

Maximum Volts	Continuous Amps per Point (Max)(1)	Amperes(2)		Voltamperes	
		Make	Break	Make	Break
240V AC	5.0 A	15 A	1.5 A	3600VA	360VA
120V AC	7.0 A(3)	30 A	3.0 A		
125V DC	2.5 A	0.4 A		50VA(4)	
24V DC	7.0 A(3)	7.0 A		168VA(4)	

(1) The continuous current per module must be limited so the module power does not exceed 1440VA.
(2) Surge Suppression – Connecting surge suppressors across your external inductive load will extend the life of the relay contacts. For additional details, see Industrial Automation Wiring and Grounding Guidelines, publication 1770-4.1.
(3) 6 A in ambient temperatures above 40 °C (104 °F)
(4) DC make/break voltamperes must be limited to 50VA for DC voltages between 28V DC and 125V DC.
DC make/beak voltamperes below 28V DC are limited by the 7 A make/break current limit.

Table 16 - Module Load Ratings – 1762-OX6I

Volts (Max)	Controlled Load (Current) per Module (Max)
240V AC	6 A
120V AC	12 A(1)
125V DC	11.5 A
24V DC	30 A(2)

(1) Current per relay limited to 6 A at ambient temperatures above 40 °C (104 °F).
(2) 24 A in ambient temperatures above 40 °C (104 °F). Limited by ambient temperature and the number of relays controlling loads. See Figure 74.

Figure 74 - Relays Used vs. Maximum Current per Relay (24V DC) 1762-OX6I

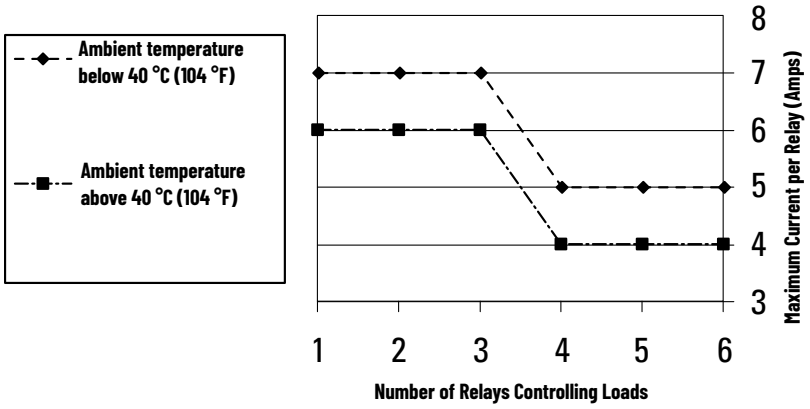

Environmental Specifications

Attribute	Value
Temperature, operating	IEC 60068-2-1 (Test Ad, Operating Cold), IEC 60068-2-2 (Test Bd, Operating Dry Heat), IEC 60068-2-14 (Test Nb, Operating Thermal Shock): -20 °C ≤ Ta ≤ +65 °C (-4 °F ≤ Ta ≤ +149 °F)
Temperature, ambient, max	65 °C (140 °F)
Temperature, surrounding air, max	65 °C (140 °F)
Temperature, nonoperating	IEC 60068-2-1 (Test Ab, Unpackaged Nonoperating Cold), IEC 60068-2-2 (Test Bb, Unpackaged Nonoperating Dry Heat), IEC 60068-2-14 (Test Na, Unpackaged Nonoperating Thermal Shock): -40...+85 °C (-40...+185 °F)
Relative humidity	IEC 60068-2-30 (Test Db, Unpackaged Damp Heat): 5...95% noncondensing
Vibration	IEC 60068-2-6 (Test Fc, Operating): 5 g @ 10...500 Hz
Shock, operating	IEC 60068-2-27 (Test Ea, Unpackaged Shock): 30 g - Panel mounted
Shock, nonoperating	IEC 60068-2-27 (Test Ea, Unpackaged Shock): 30 g - Panel mounted 40 g - DIN rail mounted
Emissions	IEC 61000-6-4
ESD immunity	EC 61000-4-2: 4 kV contact discharges 8 kV air discharges
Radiated RF immunity	IEC 61000-4-3: 10V/m with 1 kHz sine wave 80% AM from 80...6000 MHz
EFT/B immunity	IEC 61000-4-4: ±2 kV @ 5 kHz on power ports ±2 kV @ 5 kHz on signal ports ±1 kV @ 5 kHz on communication ports
Surge transient immunity	IEC 61000-4-5: ±2 kV line-line(DM) and ±4 kV line-earth(CM) on AC power ports ±500V line-line(DM) and ±1 kV line-earth(CM) on signal ports ±1 kV line-earth(CM) on shielded ports ±2 kV line-earth(CM) on communication ports
Conducted RF immunity	IEC 61000-4-6: 10V rms with 1 kHz sine wave 80% AM from 150 kHz...80 MHz

Certifications

Certification (when product is marked)[1]	Value
c-UL-us	UL Listed Industrial Control Equipment, certified for U.S. and Canada. See UL File E322657. UL Listed for Class I Division 2 Group A, B, C, D Hazardous Locations, certified for U.S. and Canada. See UL File E334470.
CE	European Union 2014/30/EU EMC Directive, compliant with: EN 61326-1; Meas./Control/Lab., Industrial Requirements EN 61000-6-2; Industrial Immunity EN 61000-6-4; Industrial Emissions EN 61131-2; Programmable Controllers (Clause 8, Zone A & B) European Union 2014/35/EU LVD, compliant with: EN 61131-2; Programmable Controllers (Clause 11) European Union 2011/62/EU RoHS, compliant with: EN IEC 63000; Technical Documentation
RCM	Australian Radiocommunications Act, compliant with: EN 61000-6-4; Industrial Emmissions
KC	Korean Registration of Broadcasting and Communications Equipment, compliant with: Article 58-2 of Radio Waves Act, Clause 3
UKCA	2016 No. 1091 – Electromagnetic Compatibility Regulations 2016 No. 1101 – Electrical Equipment (Safety) Regulations 2012 No. 3032 – Restriction of the Use of Certain Hazardous Substances in Electrical and Electronic Equipment Regulations

(1) See the Product Certification link at rok.auto/certifications for Declaration of Conformity, Certificates, and other certification details.

Analog Modules

Common Specifications – 1762-IF2OF2, 1762-IF4, 1762-IR4, 1762-IT4, 1762-OF4

Attribute	1762-IF2OF2, 1762-IF4, 1762-IR4, 1762-IT4, 1762-OF4
Dimensions HxWxD	90 x 87 x 40 mm Height including mounting tabs is 110 mm (3.54 x 3.43 x 1.58 in.) Height including mounting tabs is 4.33 in.
Module power status indicator	On: Indicates power is applied
Recommended cable	Belden 8761 (shielded) For 1762-IT4, shielded thermocouple extension wire for the specific type of thermocouple you are using. Follow the thermocouple manufacturer's recommendations.

General Specifications – 1762-IF2OF2, 1762-IF4, 1762-OF4, 1762-IR4, 1762-IT4

Attribute	1762-IF2OF2	1762-IF4	1762-OF4	1762-IR4	1762-IT4
Shipping weight, approx. (with carton)	240 g (0.53 lbs.)		235 g (0.517 lbs.)	260 g (0.57 lbs.)	220 g (0.53 lbs.)
Bus current draw, max	40 mA at 5V DC 105 mA at 24V DC	40 mA at 5V DC 50 mA at 24V DC	40 mA at 5V DC 165 mA at 24V DC	40 mA at 5V DC 50 mA at 24V DC	40 mA at 5V DC 50 mA at 24V DC
Analog normal operating range	Voltage: 0...10V DC Current: 4...20 mA	Voltage: -10...+10V DC Current: 4...20 mA	Voltage 0...10V DC Current: 4...20 mA	NA	NA
Full scale[1] analog ranges	Voltage: 0...10.5V DC Current: 0...21 mA	Voltage: -10.5...+10.5V DC Current: -21...+21 mA	Voltage: 0...10.5V DC Current: 0...21 mA	NA	NA
Resolution	12 bits (unipolar)	15 bits (bipolar) [2]	12 bits (unipolar)	Input filter and configuration dependent	15 bits plus sign
Repeatability[3]	±0.12% [2]	±0.12% [2]	±0.12% [2]	±0.1 °C (±0.18 °F) for Ni and NiFe ±0.2 °C (±0.36 °F)...±0.2 °C (±0.36 °F) for other RTD inputs ±0.04 Ω for 150 Ω resistances ±0.2 Ω for other resistances	See Table 17
Input and output group to system isolation	30V AC/30V DC rated working voltage[4] (N.E.C. Class 2 required) (IEC Class 2 reinforced insulation) type test: 500V AC or 707V DC for 1 minute		30V AC/30V DC rated working voltage (IEC Class 2 reinforced insulation) type test: 500V AC or 707V DC for 1 minute	30V AC/30V DC working voltage type test: 500V AC or 707V DC for 1 minute	30V AC/30V DC working voltage qualification test: 720V DC for 1 minute

General Specifications - 1762-IF2OF2, 1762-IF4, 1762-OF4, 1762-IR4, 1762-IT4 (Continued)

Attribute	1762-IF2OF2	1762-IF4	1762-OF4	1762-IR4	1762-IT4
Vendor ID code	1	1	1	1	1
Product type code	10	10	10	10	10
Product code	75	67	66	65	64

(1) The overrange or underrange flag comes on when the normal operating range (over/under) is exceeded. The module continues to convert the analog input up to the maximum full-scale range.
(2) Only applicable for series B and series C I/O modules.
(3) Repeatability is the ability of the module to register the same reading in successive measurements for the same signal.
(4) Rated working voltage is the maximum continuous voltage that can be applied at the terminals regarding earth ground.

Input Specifications - 1762-IF2OF2, 1762-IF4, 1762-IR4, 1762-IT4

Attribute	1762-IF2OF2	1762-IF4	1762-IR4	1762-IT4
Number of inputs	2 differential (unipolar)	4 differential (bipolar)	4	4 input channels plus 1 CJC sensor
Update time (typical)	2.5 ms	130, 250, 290, 450, 530 ms (selectable)	Input filter and configuration dependent	NA
A/D converter type	Successive approximation	Successive approximation	Delta-Sigma	Delta-Sigma
Common mode voltage range(1)	±27V	±27V	NA	±10V
Common mode rejection(2)	> 55 dB at 50 Hz and 60 Hz	> 55 dB at 50 Hz and 60 Hz	>110 dB at 50 Hz (with 10 Hz or 60 Hz filter)	>110 dB at 50 Hz (with 10 Hz or 60 Hz filter)
Non-linearity (in percent full scale)	±0.12% (3)	±0.12% (2)	±0.05%	NA
Typical overall accuracy(4)	±0.55% full scale at -20...+65 °C(2) ±0.3% full scale at 25 °C	±0.32% full scale at -20...+65 °C (2) ±0.24% full scale at 25 °C	±0.5 °C (°F) for Pt 385	NA
Input impedance	Voltage Terminal: 200 kΩ Current Terminal: 250 Ω	Voltage Terminal: 200 kΩ Current Terminal: 275 Ω	>10 MΩ	>10 MΩ
Current input protection	±32 mA	±32 mA	NA	NA
Voltage input protection	±30V	±30V	NA	NA
Channel diagnostics	Over or under range or open circuit condition by bit reporting for analog inputs.	Over or under range or open circuit condition by bit reporting for analog inputs.	Over or under range or open circuit condition by bit reporting for analog inputs.	Over or under range or open circuit condition by bit reporting for analog inputs.

(1) For proper operation, both the plus and minus input terminals must be within ±27V (±10V for 1762-IT4) of analog common.
(2) $V_{cm} = 1\ V_{pk\text{-}pk}$ AC
(3) Only applicable for series B and series C I/O modules.
(4) $V_{cm} = 0$ (includes offset, gain, non-linearity, and repeatability error terms)

Input Specifications 1762-IR4

Attribute	1762-IR4
Input types	100 Ω Platinum 385 200 Ω Platinum 385 500 Ω Platinum 385 1000 Ω Platinum 385 100 Ω Platinum 3916 200 Ω Platinum 3916 500 Ω Platinum 3916 1000 Ω Platinum 3916 10 Ω Copper 426 120 Ω Nickel 672 120 Ω Nickel 618 604 Ω Nickel-Iron 518 0...150 Ω 0...500 Ω 0...1000 Ω 0...3000 Ω
Heat dissipation	1.5 Total Watts (The Watts per point, plus the minimum Watts, with all points enabled)
Normal mode rejection ratio	70 dB minimum at 50 Hz with the 10 Hz or 50 Hz filter selected 70 dB minimum at 60 Hz with the 10 Hz or 60 Hz filter selected

Input Specifications 1762-IR4 (Continued)

Attribute	1762-IR4	
Typical accuracy (Auto-calibration enabled) at 25 °C (77 °F) ambient with module operating temperature at 25 °C (77 °F)[1]	±0.5 °C (°F) for Pt 385 ±0.4 °C (°F) for Pt 3916 ±0.2 °C (°F) for Ni ±0.3 °C (°F) for NiFe ±0.6 °C (°F) for Cu	±0.15 Ω for 150 Ω range ±0.5 Ω for 500 Ω range ±1.0 Ω for 1000 Ω range ±1.5 Ω for 3000 Ω range
Typical accuracy (Auto-calibration enabled) at 0...55 ° C (32...131 °F)[1]	±0.9 °C (°F) for Pt 385 ±0.8 °C (°F) for Pt 3916 ±0.4 °C (°F) for Ni ±0.5 °C (°F) for NiFe ±1.1 °C (°F) for Cu	±0.25 Ω for 150 Ω range ±0.8 Ω for 500 Ω range ±1.5 Ω for 1000 Ω range ±2.5 Ω for 3000 Ω range
Accuracy drift at 0...55 ° C (32...131 °F)	±0.026 °C/°C (0.026 °F/°F) for Pt 385 ±0.023 °C/°C (0.023 °F/°F) for Pt 3916 ±0.012 °C/°C (0.012 °F/°F) for Ni ±0.015 °C/°C (0.015 °F/°F) for NiFe ±0.032 °C/°C (0.032 °F/°F) for Cu	±0.007 Ω/ °C (0.012 Ω/ °F) for 150 Ω range ±0.023 Ω/ °C (0.041 Ω/ °F) for 500 Ω range ±0.043 Ω/ °C (0.077 Ω/ °F) for 1000 Ω range ±0.07 Ω/ °C (0.130 Ω/ °F) for 3000 Ω range
Excitation current source	0.5 mA and 1.0 mA selectable per channel	
Open-circuit detection time[2]	6...1212 ms	
Input channel configuration	Via configuration software screen or the user program (by writing a unique bit pattern into the module's configuration file). See your controller's user manual to determine if user program configuration is supported.	
Calibration	The module performs auto-calibration on channel enable and on a configuration change between channels. You can also program the module to calibrate every 5 minutes.	
Maximum overload at input terminals	±35V DC continuous	
Cable impedance, max	25 Ω — Operating with >25 Ω reduces accuracy.	
Channel to channel isolation	±10V DC	

(1) Accuracy is dependent upon the Analog/Digital converter filter rate selection, excitation current selection, data format, and input noise.
(2) Open-circuit detection time is equal to channel update time.

Input Specifications 1762-IT4

Attribute	Value
Heat dissipation	1.5 Total Watts (The Watts per point, plus the minimum Watts, with all points energized)
Response speed per channel	Input filter and configuration dependent
Rated working voltage[1]	30V AC/30V DC
Normal mode rejection ratio	85 dB (minimum) at 50 Hz (with 10 Hz or 50 Hz filter) 85 dB (minimum) at 60 Hz (with 10 Hz or 60 Hz filter)
Cable impedance, max	25 Ω (for specified accuracy)
Open-circuit detection time	7 ms...1.515 s[2]
Calibration	The module performs auto-calibration upon power-up and whenever a channel is enabled. You can also program the module to calibrate every 5 minutes.
CJC accuracy	±1.3 °C (±2.34 °F)
Maximum overload at input terminals	±35V DC continuous[3]
Input channel configuration	Via configuration software screen or the user program (by writing a unique bit pattern into the module's configuration file)

(1) Rated working voltage is the maximum continuous voltage that can be applied at the input terminal, including the input signal and the value that floats above ground potential (for example, 30V DC input signal and 20V DC potential above ground).
(2) Open-circuit detection time is equal to the module scan time, which is based on the number of enabled channels, the filter frequency of each channel, and whether cyclic calibration is enabled.
(3) Maximum current input is limited due to input impedance.

Table 17 - 1762-IT4 Repeatability at 25°C (77°F)[1] [2]

Input Type	Repeatability for 10 Hz Filter
Thermocouple J	±0.1 °C [±0.18 °F]
Thermocouple N (-110...+1300 °C [-166...+2372 °F])	±0.1 °C [±0.18 °F]
Thermocouple N (-210...+110 °C [-346...+166 °F])	±0.25 °C [±0.45 °F]
Thermocouple T (-170...+400 °C [-274...+752 °F])	±0.1 °C [±0.18 °F]
Thermocouple T (-270...+170 °C [-454...+274 °F])	±1.5 °C [±2.7 °F]

Table 17 - 1762-IT4 Repeatability at 25°C (77°F)(1) (2) (Continued)

Input Type	Repeatability for 10 Hz Filter
Thermocouple K (-270...+1370 °C [-454...+2498 °F])	±0.1 °C [±0.18 °F]
Thermocouple K (-270...+170 °C [-454...+274 °F])	±2.0 °C [±3.6 °F]
Thermocouple E (-220...+1000 °C [-364...+1832 °F])	±0.1 °C [±0.18 °F]
Thermocouple E (-270...+220 °C [-454...+364 °F])	±1.0 °C [±1.8 °F]
Thermocouples S and R	±0.4 °C [±0.72 °F]
Thermocouple C	±0.2 °C [±0.36 °F]
Thermocouple B	±0.7 °C [±1.26 °F]
±50 mV	±6 µV
±100 mV	±6 µV

(1) Repeatability is the ability of the input module to register the same reading in successive measurements for the same input signal.
(2) Repeatability at any other temperature in the 0...60 °C (32...140 °F) range is the same as long as the temperature is stable.

Table 18 - 1762-IT4 Accuracy

Input Type(1)	With Autocalibration Enabled		Without Autocalibration
	Accuracy for 10 Hz, 50 Hz, and 60 Hz Filters (Max)		Maximum Temperature Drift(2)
	@ 25 °C (77 °F) Ambient	@ 0...60 °C (32...140 °F) Ambient	@ 0...60 °C (32...140 °F) Ambient
Thermocouple J (-210...+1200 °C [-346...+2192 °F])	±0.6 °C [±1.1 °F]	±0.9 °C [±1.7 °F]	±0.0218 °C/°C [±0.0218 °F/°F]
Thermocouple N (-200...+1300 °C [-328...+2372 °F])	±1 °C [±1.8 °F]	±1.5 °C [±2.7 °F]	±0.0367 °C/°C [±0.0367 °F/°F]
Thermocouple N (-210...-200 °C [-346...-328 °F])	±1.2 °C [±2.2 °F]	±1.8 °C [±3.3 °F]	±0.0424 °C/°C [±0.0424 °F/°F]
Thermocouple T (-230...+400 °C [-382...+752 °F])	±1 °C [±1.8 °F]	±1.5 °C [±2.7 °F]	±0.0349 °C/°C [±0.0349 °F/°F]
Thermocouple T (-270...-230 °C [-454...-382 °F])	±5.4 °C [±9.8 °F]	±7.0 °C [±12.6 °F]	±0.3500 °C/°C [±0.3500 °F/°F]
Thermocouple K (-230...+1370 °C [-382...+2498 °F])	±1 °C [±1.8 °F]	±1.5 °C [±2.7 °F]	±0.4995 °C/°C [±0.4995 °F/°F]
Thermocouple K (-270...-225°C [-454...-373°F])	±7.5°C [±13.5°F]	±10°C [±18 °F]	±0.0378°C/°C [±0.0378°F/°F]
Thermocouple E (-210...+1000°C [-346...+1832°F])	±0.5°C [±0.9°F]	±0.8°C [±1.5 °F]	±0.0199°C/°C [±0.0199°F/°F]
Thermocouple E (-270...-210 °C [-454...-346 °F])	±4.2 °C [±7.6 °F]	±6.3 °C [±11.4 °F]	±0.2698 °C/°C [±0.2698 °F/°F]
Thermocouple R	±1.7 °C [±3.1 °F]	±2.6 °C [±4.7 °F]	±0.0613 °C/°C [±0.0613 °F/°F]
Thermocouple S	±1.7 °C [±3.1 °F]	±2.6 °C [±4.7 °F]	±0.0600 °C/°C [±0.0600 °F/°F]
Thermocouple C	±1.8 °C [±3.3 °F]	±3.5 °C [±6.3 °F]	±0.0899 °C/°C [±0.0899 °F/°F]
Thermocouple B	±3.0 °C [±5.4 °F]	±4.5 °C [±8.1 °F]	±0.1009 °C/°C [±0.1009 °F/°F]
±50 mV	±15 µV	±25 µV	±0.44 µV/°C [±0.80 µV/°F]
±100 mV	±20 µV	±30 µV	±0.69 µV/°C [±01.25 µV/°F]

(1) The module uses the National Institute of Standards and Technology (NIST) ITS-90 standard for thermocouple linearization.
(2) Temperature drift with autocalibration is slightly better than without autocalibration.

For more detailed 1762-IT4 accuracy information, see the MicroLogix 1200 Thermocouple/mV Input Module User Manual, publication 1762-UM002.

Table 19 - Output Specifications – 1762-IF2OF2, 1762-OF4

Specification	1762-IF2OF2	1762-OF4
Number of outputs	2 single-ended (unipolar)	4 single-ended (unipolar)(2)
Update time (typical)	4.5 ms	2.5 ms
D/A converter type	Resistor string	R-2R ladder voltage switching
Resistive load on current output	0...500 Ω (includes wire resistance)	0...500 Ω (includes wire resistance)
Load range on voltage output	> 1 kΩ	> 1 kΩ
Reactive load, current output	< 0.1 mH	< 0.1 mH
Reactive load, voltage output	< 1 µF	< 1 µF
Typical overall accuracy(1)	±1.17% full scale @ -20...+65 °C (-4...+149 °F)(2) ±0.5% full scale @ 25 °C (77 °F)	±1.17% full scale @ -20...+65 °C (-4...+149 °F)(2) ±0.5% full scale @ 25 °C (77 °F)
Output ripple range 0 to 500 Hz (referred to output range)	< ±0.1%	< ±0.1%

Table 19 - Output Specifications – 1762-IF2OF2, 1762-OF4 (Continued)

Specification	1762-IF2OF2	1762-OF4
Non-linearity (in percent full scale)	< ±0.59%(2)	< ±0.59%(2)
Open and short-circuit protection	Continuous	Continuous
Output protection	±32 mA	±32 mA
Heat dissipation	2.6 W	2.8 W

(1) Includes offset, gain, non-linearity, and repeatability error terms.
(2) Only applicable to series B I/O modules.

Table 20 - Valid Input/Output Data Word Formats/Ranges for 1762-IF2OF2

Normal Operating Range	Full Scale Range	RAW/Proportional Data	Scaled-for-PID
0...0V DC	10.5V DC	32760	16380
	0.0V DC	0	0
4... 20 mA	21.0 mA	32760	16380
	20.0 mA	31200	15600
	4.0 mA	6240	3120
	0.0 mA	0	0

Environmental Specifications

Attribute	Value
Temperature, storage	-40...+85 °C (-40...+185 °F)
Temperature, operating	-20...+65 °C (-4...+149 °F)(1)
Operating humidity	5...95% noncondensing
Operating altitude	2000 m (6561 ft.)
Vibration	Operating: 10...500 Hz, 5 g, 0.030 in. max peak-to-peak
Shock	Operating: 30 g
Emissions	IEC 61000-6-4
ESD immunity	IEC 61000-4-2: 6 kV contact discharges 8 kV air discharges
Radiated RF immunity	IEC 61000-4-3: 10V/m with 1 kHz sine wave 80% AM from 80...1000 MHz 3V/m with 1 kHz sine wave 80% AM from 1.4...2.0 GHz 1V/m with 1 kHz sine wave 80% AM from 2.0...2.7 GHz
EFT/B immunity	IEC 61000-4-4: ±2 kV @ 5 kHz on signal ports
Surge transient immunity	IEC 61000-4-5: ±1 kV line-earth(CM) on shielded ports
Conducted RF immunity	IEC 61000-4-6: 10V rms with 1 Hz sine wave 80% AM from 150 kHz...80 MHz(2)

(1) See the module's Installation Instruction for exact operating temperature range.
(2) For grounded thermocouples, the 10V level is reduced to 3V.

Certifications

Certification (when product is marked)(1)	Value
UL	UL Listed for Class I Division 2 Group A, B, C, D Hazardous Locations
cUL	UL Listed for Class I Division 2 Group A, B, C, D Hazardous Locations, certified for Canada.
CE	European Union 2014/30/EU EMC Directive, compliant with: EN 61000-6-2; Industrial Immunity EN 61000-6-4; Industrial Emissions EN 61131-2; Programmable Controllers (Clause 8, Zone A & B)
RCM	Australian Radiocommunications Act, compliant with: AS/NZS CISPR 11; Industrial Emissions
KC	Korean Registration of Broadcasting and Communications Equipment, compliant with: Article 58-2 of Radio Waves Act, Clause 3

(1) See the Product Certification link at rok.auto/certifications for Declaration of Conformity, Certificates, and other certification details.

1762 Replacement Parts

MicroLogix 1200 RTB Replacement Kit

The 40-point controller removable terminal blocks kit (catalog number 1762-RPLRTB40) consists of:

- One 25-point double row terminal block
- One 29-point double row terminal block

Both are terminal blocks for a 40-point controller.

Notes:

Troubleshoot Your System

Understand the Controller Status Indicators

The controller status indicators provide a mechanism to determine the current status of the controller if a programming device is not present or available.

Figure 75 - Controller Status Indicator Location

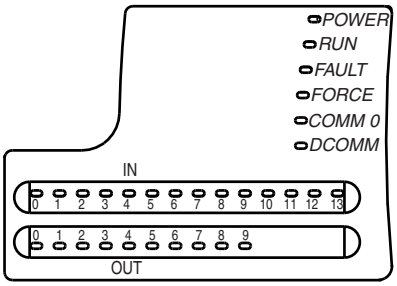

Table 21 - Controller Status Indicators

Status Indicator	Color	Indicates
POWER	Off	No input power or power error condition
	Steady green	Power on
RUN	Off	Not executing the user program
	Steady green	Executing the user program in run mode
	Flashing green	Memory module transfer occurring
FAULT	Off	No fault detected
	Flashing red	Application fault detected
	Steady red	Controller hardware faulted
FORCE	Off	No forces installed
	Steady amber	Forces installed
COMM 0(1)	Off	Not transmitting via RS-232 port
	Steady green	Transmitting via RS-232 port
DCOMM(2)	Off	Configured communications
	Steady green	Default communications
INPUTS	Off	Input is not energized
	Steady amber	Input is energized (terminal status)
OUTPUTS	Off	Output is not energized
	Steady amber	Output is engerized (logic status)

(1) 1762-L24AWAR, 1762-L24BWAR, 1762-L24BXBR, 1762-L40AWAR, 1762-L40BWAR, 1762-L40BXBR controllers are equipped with an additional communications port (Programmer/HMI Port) but provide no additional LED indictor indicating its operational status.

(2) When using a 1762-L24AWAR, 1762-L24BWAR, 1762-L24BXBR, 1762-L40AWAR, 1762-L40BWAR, or 1762-L40BXBR controller, the DCOMM LED applies only to Channel 0.

Normal Operation

The POWER and RUN status indicators are On. If a force condition is active, the FORCE status indicator turns on and remains on until all forces are removed.

Error Conditions

If an error exists within the controller, the controller LEDs operate as described in Table 22.

Table 22 - List of Error Conditions

If the LEDS Indicate	The Following Error Exists	Probable Cause	Recommended Action
All LEDs off	No input power or power supply error	No line power	Verify proper line voltage and connections to the controller.
		Power supply overloaded	This problem can occur intermittently if power supply is overloaded when output loading and temperature varies.
Power and FAULT LEDs on solid	Hardware faulted	Processor hardware error	Cycle power. Contact your local Allen-Bradley representative if the error persists.
		Loose wiring	Verify connections to the controller.
Power LED on and FAULT LED flashing	Application fault	Hardware/software major fault detected	For error codes and Status File information, see MicroLogix 1200 and MicroLogix 1500 Programmable Controllers Instruction Set Reference Manual, publication 1762-RM001.
RUN, FORCE, and FAULT LEDs all flashing	Operating system fault	Missing or corrupt operating system	See Missing or Corrupt OS LED Pattern on page 96.

Controller Error Recovery Model

Figure 76 helps you diagnose software and hardware problems in the micro controller. The model provides common questions you might ask to help troubleshoot your system. See the recommended pages within the model for further help.

Figure 76 - Controller Error Recovery Model

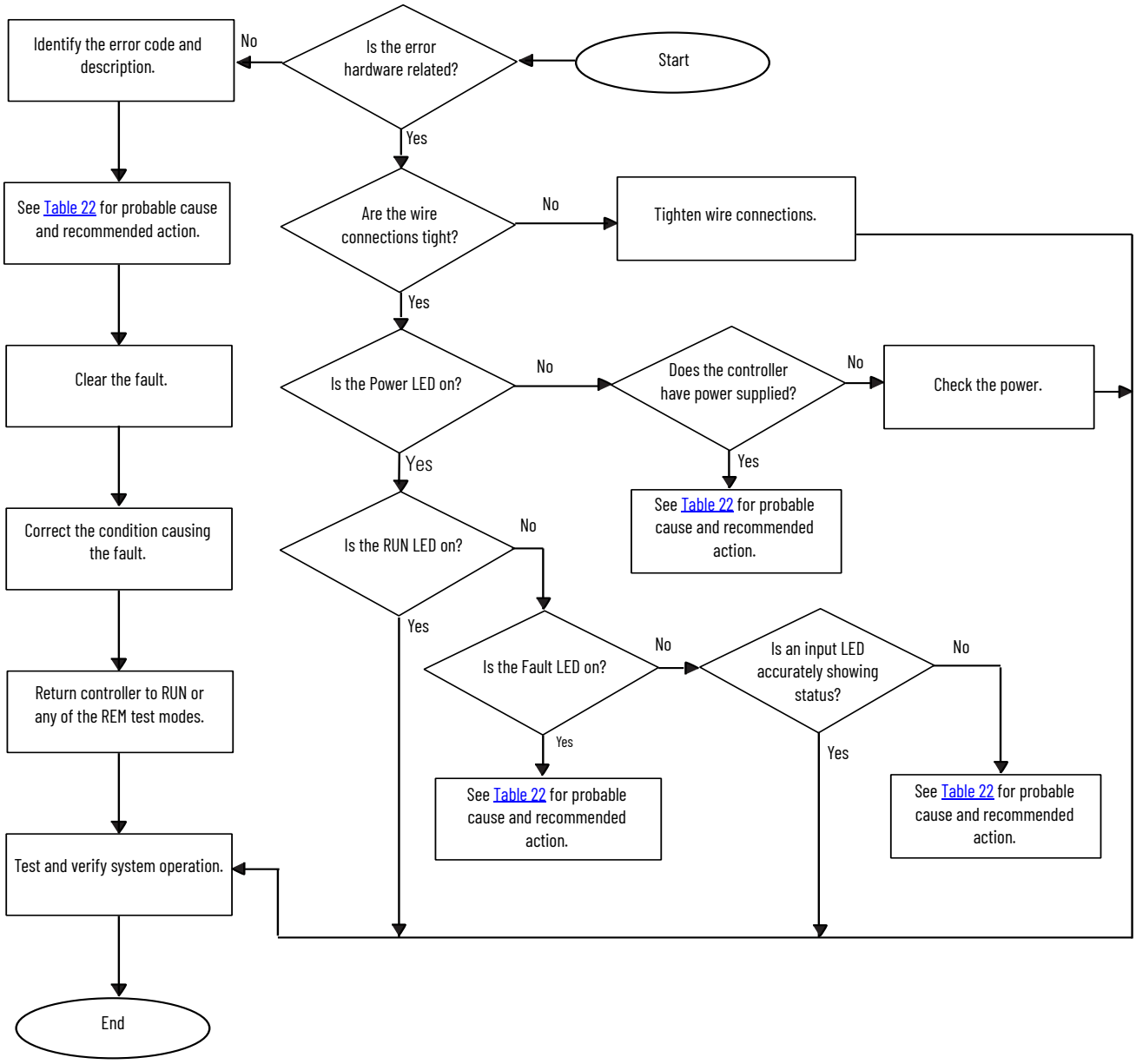

Analog Expansion I/O Diagnostics and Troubleshooting

Module Operation and Channel Operation

The module performs operations at two levels:

- Module level
- Channel level

Module-level operations include functions such as power-up, configuration, and communication with the controller.

Internal diagnostics are performed at both levels of operation. Both module hardware and channel configuration error conditions are reported to the controller. Channel overrange or underrange conditions are reported in the module's input data table. Module hardware errors are reported in the controller's I/O status file. See MicroLogix 1200 and MicroLogix 1500 Programmable Controllers Instruction Set Reference Manual, publication 1762-RM001 for more information.

When a fault condition is detected, the analog outputs are reset to zero.

Power-up Diagnostics

At module power-up, a series of internal diagnostic tests are performed.

Table 23 - Module Status LED State Table

If Module Status LED is	Indicated Condition	Corrective Action
On	Proper Operation	No action is required.
Off	Module Fault	Cycle power. If condition persists, replace the module. Call your local distributor or Allen-Bradley for assistance.

Critical and Non-critical Errors

Non-critical module errors are recoverable. Channel errors (overrange or underrange errors) are non-critical. Non-critical error conditions are indicated in the module input data table. Non-critical configuration errors are indicated by the extended error code.

Critical module errors are conditions that prevent normal or recoverable operation of the system. When these types of errors occur, the system leaves the run mode of operation.

Critical and non-critical module errors are indicated in Table 26.

Module Error Definition Table

Analog module errors are expressed in two fields as four-digit Hex format with the most significant digit as "don't care" and irrelevant. The two fields are "Module Error" and "Extended Error Information". The structure of the module error data is shown in Table 24.

Table 24 - Module Error Table

"Don't Care" Bits				Module Error			Extended Error Information								
15	14	13	12	11	10	9	8	7	6	5	4	3	2	1	0
0	0	0	0	0	0	0	0	0	0	0	0	0	0	0	0
Hex Digit 4				Hex Digit 3			Hex Digit 2					Hex Digit 1			

Module Error Field

The purpose of the module error field is to classify module errors into three distinct groups, as described in Table 25. The type of error determines what kind of information exists in the extended error information field. These types of module errors are typically reported in the controller's I/O status file. See MicroLogix 1200 and MicroLogix 1500 Programmable Controllers Instruction Set Reference Manual, publication 1762-RM001 for more information.

Table 25 - Module Error Types

Error Type	Module Error Field Value Bits 11 through 09 (Binary)	Description
No Errors	000	No error is present. The extended error field holds no additional information.
Hardware Errors	001	General and specific hardware error codes are specified in the extended error information field.
Configuration Errors	010	Module-specific error codes are indicated in the extended error field. These error codes correspond to options that you can change directly. For example, the input range or input filter selection.

Extended Error Information Field

Check the extended error information field when a non-zero value is present in the module error field. See Table 26 and Table 27.

If no errors are present in the module error field, the extended error information field is set to zero.

Hardware Errors

General or module-specific hardware errors are indicated by module error code 2. See Table 26 and Table 27.

Configuration Errors

If you set the fields in the configuration file to invalid or unsupported values, the module ignores the invalid configuration, generates a non-critical error, and keeps operating with the previous configuration.

Table 26 and Table 27 lists the configuration error codes defined for the module.

Error Codes

Table 26 - Extended Error Codes for 1762-IF20F2

Error Type	Hex Equivalent(1)	Module Error Code	Extended Error Information Code	Error Description
		Binary	Binary	
No Error	X000	000	0 0000 0000	No error
General Common Hardware Error	X200	001	0 0000 0000	General hardware error; no additional information
	X201	001	0 0000 0001	Power-up reset state
Hardware-specific Error	X210	001	0 0001 0000	Reserved
Configuration Error	X400	010	0 0000 0000	General configuration error; no additional information
	X401	010	0 0000 0001	Invalid input data format selected (channel 0)
	X402	010	0 0000 0010	Invalid input data format selected (channel 1)
	X403	010	0 0000 0011	Invalid output data format selected (channel 0)
	X404	010	0 0000 0100	Invalid output data format selected (channel 1)

(1) X represents "Don't Care".

Table 27 - Extended Error Codes for 1762-IF4 and 1762-OF4

Error Type	Hex Equivalent(1)	Module Error Code	Extended Error Information Code	Error Description
		Binary	Binary	
No Error	X000	000	0 0000 0000	No error
General Common Hardware Error	X200	001	0 0000 0000	General hardware error; no additional information
	X201	001	0 0000 0001	Power-up reset state
Hardware-specific Error	X300	001	1 0000 0000	Reserved

Table 27 - Extended Error Codes for 1762-IF4 and 1762-OF4 (Continued)

Error Type	Hex Equivalent[1]	Module Error Code	Extended Error Information Code	Error Description
		Binary	Binary	
Configuration Error	X400	010	0 0000 0000	General configuration error; no additional information
	X401	010	0 0000 0001	Invalid range select (Channel 0)
	X402	010	0 0000 0010	Invalid range select (Channel 1)
	X403	010	0 0000 0011	Invalid range select (Channel 2)
	X404	010	0 0000 0100	Invalid range select (Channel 3)
	X405	010	0 0000 0101	Invalid filter select (Channel 0) – 1762-IF4 only
	X406	010	0 0000 0110	Invalid filter select (Channel 1) – 1762-IF4 only
	X407	010	0 0000 0111	Invalid filter select (Channel 2) – 1762-IF4 only
	X408	010	0 0000 1000	Invalid filter select (Channel 3) – 1762-IF4 only
	X409	010	0 0000 1001	Invalid format select (Channel 0)
	X40A	010	0 0000 1010	Invalid format select (Channel 1)
	X40B	010	0 0000 1011	Invalid format select (Channel 2)
	X40C	010	0 0000 1100	Invalid format select (Channel 3)

(1) X represents 'Don't Care'.

Call Rockwell Automation for Assistance

If you need to contact Rockwell Automation or local distributor for assistance, it is helpful to obtain the following (prior to calling):

- Controller type, series letter, revision letter, and firmware (FRN) number of the controller
- Controller LED status
- Controller error codes (See MicroLogix 1200 and MicroLogix 1500 Programmable Controllers Instruction Set Reference Manual, publication 1762-RM001 for error code information.)

Use ControlFLASH to Upgrade Your Operating System

The operating system (OS) can be upgraded through the communication port on the controller. To download a new operating system, you must have the ControlFLASH™ Upgrade Kit, which is described in the ControlFLASH User Manual, publication 1756-UM105.

The newer OS firmware for the controller is prepared in DMK disk image format which requires ControlFLASH version 13.00 or later.

To download new OS firmware for a MicroLogix controller, go to the Rockwell Automation Product Compatibility and Download Center (PCDC) at rok.auto/pcdc.

Prepare for Firmware Update

Before upgrading the controller's operating system, you must:

- Install ControlFLASH software on your computer.
- Extract the DMK kit containing the latest firmware (for ControlFLASH version 13.00 or later only).
- Prepare the controller for updating.

IMPORTANT	Installing a new operating system deletes the user program. After the operating system upgrade is successful, you must transfer your control program back to the controller. The communication parameters are described in Table 6.

Install ControlFLASH Software

To install ControlFLASH properly, see the Install ControlFLASH section in ControlFLASH User Manual, publication 1756-UM105.

If a ControlFLASH directory does not exist, one is created in your Program Files directory.

For 1762-Lxxxxx controllers, double-click the 1762-LSC-FRNxx.exe file to install the operating system upgrade (where xx is the firmware revision number).

For 1762-LxxxxxR controllers, double-click the 1762-LRC-FRNxx.exe file to install the operating system upgrade.

Prepare the Controller for Firmware Update

Controller Configuration

The controller must be configured for default communications (use Communications Toggle push button; DCOMM LED on) and be in the Program mode to allow the download of a new operating system.

Sequence of Operation

The following steps detail the key events in the upgrade process.

1. Controller mode and communications parameters are checked.
2. Download begins.
3. During the download, the Force, Battery, and Comms LEDs perform a walking bit pattern.
4. When the download is complete, the integrity of the new OS is checked. If the new OS is corrupt, the controller sends an error message to the download tool and flashes the Missing or Corrupt OS LED pattern. See Missing or Corrupt OS LED Pattern on page 96.
5. Following a successful transfer, the Power, Force, and Battery LEDs flash on and remain on for five seconds. Then the controller resets.

Missing or Corrupt OS LED Pattern

When an operating system download is not successful or if the controller does not contain a valid operating system, the controller flashes the Run, Force, and Fault LEDs on and off.

Connect to Networks via RS-232 Interface

The following protocols are supported from the RS-232 communication channel (Channel 0):

- DF1 Full-duplex
- DF1 Half-duplex master/slave
- DR1 Radio modem
- DH-485
- Modbus RTU master/slave
- ASCII

RS-232 Communication Interface

The communications port on the MicroLogix 1200 controller utilizes an RS-232 interface. RS-232 is an Electronics Industries Association (EIA) standard that specifies the electrical and mechanical characteristics for serial binary communication. They provide various system configuration possibilities. RS-232 defines electrical connection characteristics; not protocols.

One of the biggest benefits of an RS-232 interface is that it lets you integrate telephone and radio modems into your control system (using the appropriate DF1 protocol only, not DH-485 protocol), but it is for point-to-point connections only between two devices.

DF1 Full-duplex Protocol

DF1 Full-duplex protocol provides a point-to-point connection between two devices. DF1 Full-duplex protocol combines data transparency (American National Standards Institute ANSI - X3.28-1976 specification subcategory D1) and 2-way simultaneous transmission with embedded responses (subcategory F1).

MicroLogix 1200 controllers support the DF1 Full-duplex protocol via RS-232 connection to external devices, such as computers, or other controllers that support DF1 Full-duplex.

DF1 is an open protocol. See the DF1 Protocol and Command Set Reference Manual, publication 1770-RM516, for more information.

DF1 Full-duplex protocol (also referred to as DF1 point-to-point protocol) is useful where RS-232 point-to-point communication is required. DF1 protocol controls message flow, detects and signals errors, and retries if errors are detected.

Example DF1 Full-duplex Connections

For information about required network connecting equipment, see Communication Connections on page 53.

Figure 77 - Example of DF1 Full-duplex Connections

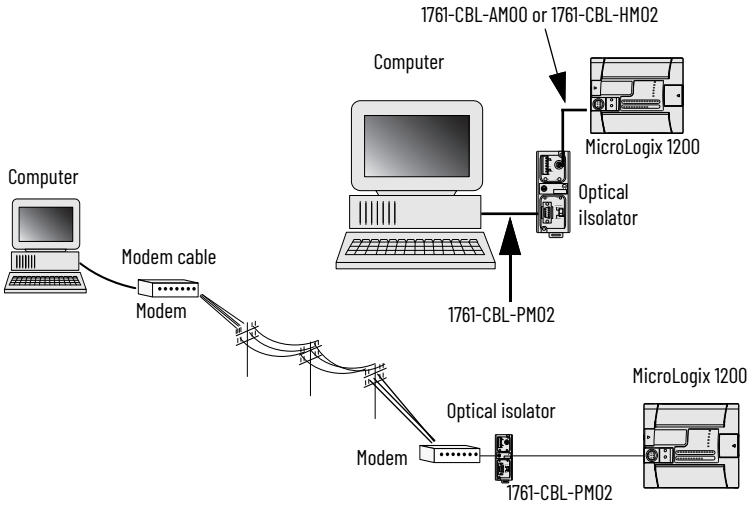

We recommend using an AIC+, catalog number 1761-NET-AIC, as your optical isolator.

DF1 Half-duplex Protocol

DF1 Half-duplex protocol is a multi-drop single master/multiple slave network. DF1 Half-duplex protocol supports data transparency (American National Standards Institute ANSI - X3.28-1976 specification subcategory D1). In contrast to DF1 Full-duplex, communication takes place in one direction at a time. You can use the RS-232 port on the MicroLogix 1200 controller as both a Half-duplex programming port and a Half-duplex peer-to-peer messaging port.

A MicroLogix 1200 controller can act as the master or as a slave on a Half-duplex network. When the MicroLogix 1200 controller is a slave device, a master device is required to 'run' the network. Several other Allen-Bradley products support the DF1 Half-duplex master protocol. They include the SLC 5/03 and higher processors, enhanced PLC-5® processors and RSLinx® software (version 2.x or later).

DF1 Half-duplex supports up to 255 devices (address 0...254) with address 255 reserved for master broadcasts. As a DF1 Half-duplex slave device, the MicroLogix 1200 controller supports broadcast reception. As a DF1 Half-duplex master, the MicroLogix 1200 controller supports both the reception and initiation of broadcast write commands (via the MSG instruction). The MicroLogix 1200 controller also supports Half-duplex modems using RTS/CTS hardware handshaking.

Figure 78 - Example of DF1 Half-duplex Connections

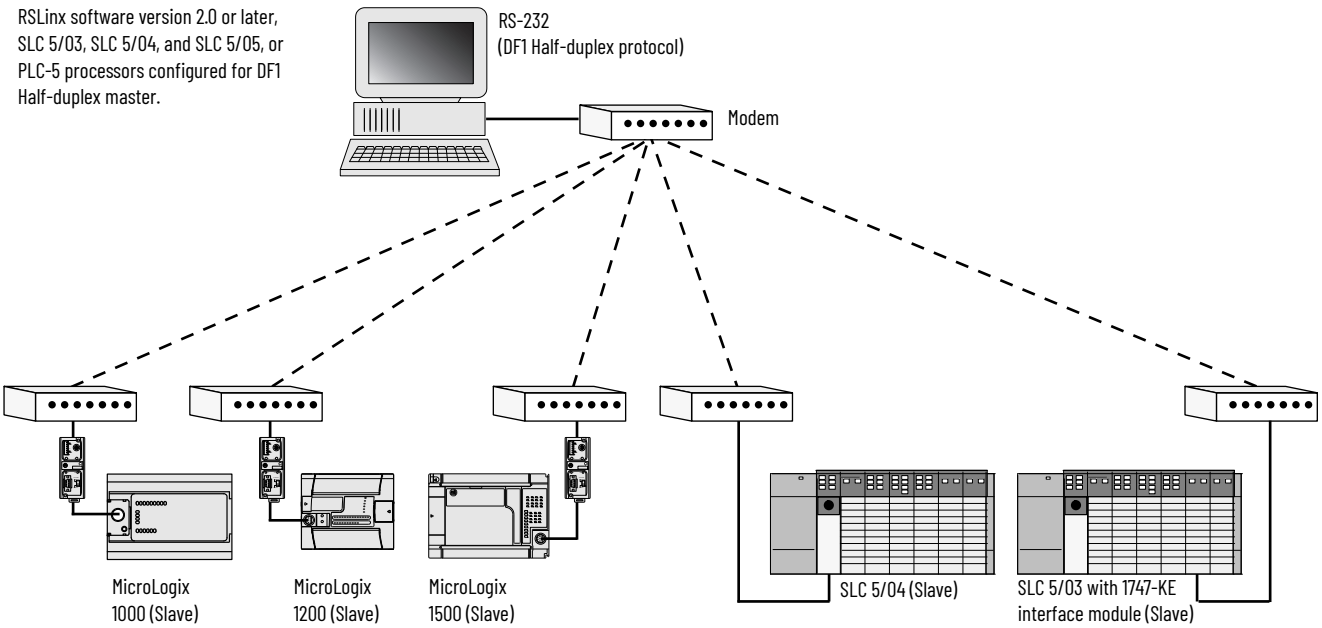

Use Modems with MicroLogix Programmable Controllers

The types of modems you can use with MicroLogix controllers include the following:

- Dial-up phone modems
  A MicroLogix 1200 controller, on the receiving end of the dial-up connection, can be configured for DF1 Full-duplex protocol with or without handshaking. The modem connected to the MicroLogix controller should support auto-answer. The MicroLogix 1200 controller supports ASCII out communications. Therefore, it can cause a modem to initiate or disconnect a phone call.
- Leased-line modems
  Leased-line modems are used with dedicated phone lines that are typically leased from the local phone company. The dedicated lines can be in a point-to-point topology to support Full-duplex communications between two modems or in a multi-drop topology supporting Half-duplex communications between three or more modems.
- Radio modems
  Radio modems may be implemented in a point-to-point topology supporting either Half-duplex or Full-duplex communications, or in a multi-drop topology supporting Half-duplex communications between three or more modems. MicroLogix 1200 also supports DF1 Radio Modem protocol.
- Line drivers
  Line drivers, also called short-haul modems, do not actually modulate the serial data, but rather condition the electrical signals to operate reliably over long transmission distances (up to several miles). Line drivers are available in Full-duplex and Half-duplex models. Allen-Bradley's AIC+ Advanced Interface Converter is a Half-duplex line driver that converts an RS-232 electrical signal into an RS-485 electrical signal, increasing the signal transmission distance from 15...1219 m (50...4000 ft.) (2438 m (8000 ft.) when bridged).

For point-to-point Full-duplex modem connections that do not require any modem handshaking signals to operate, use DF1 Full-duplex protocol with no handshaking. For point-to-point Full-duplex modem connections that require RTS/CTS handshaking, use DF1 Full-duplex protocol with handshaking.

For radio modem connections, use DF1 Radio Modem protocol, especially if store and forward capability is required.

For general multi-drop modem connections, or for point-to-point modem connections that require RTS/CTS handshaking, use DF1 Half-duplex slave protocol. In this case, one (and only one) of the other devices must be configured for DF1 Half-duplex master protocol.

IMPORTANT Never attempt to use DH-485 protocol through modems under any circumstance.

All MicroLogix 1200 controllers support RTS/CTS modem handshaking when configured for DF1 Full-duplex protocol with the control line parameter set to Full-duplex Modem Handshaking or DF1 Half-duplex slave protocol with the control line parameter set to 'Half-duplex Modem'. No other modem handshaking lines (Data Set Ready, Carrier Detect, and Data Terminal Ready) is supported by any MicroLogix 1200 controllers.

DH-485 Communication Protocol

The DH-485 protocol defines the communication between multiple devices that coexist on a single pair of wires. DH-485 protocol uses RS-485 Half-duplex as its physical interface. RS-485 is a definition of electrical connection characteristics; it is not a protocol. RS-485 uses devices that can coexist on a common data circuit, thus allowing data to be easily shared between devices.

The DH-485 network offers:

- Interconnection of 32 devices
- Multi-master (peer-to-peer) capability
- Token passing access control
- The ability to add or remove nodes without disrupting the network
- Maximum network segment of 1219 m (4000 ft.)

The DH-485 protocol supports two classes of devices: initiators and responders. All initiators on the network get a chance to initiate message transfers. To determine which initiator has the right to transmit, a token passing algorithm is used.

Control of message transfers on the DH-485 network is performed by rotating the token along the nodes on the network. A node holding the token can send a message onto the network. Each node is allowed a fixed number of transmissions (based on the Token Hold Factor) each time it receives the token. After a node sends a message, it passes the token to the next device.

The allowable range of node addresses is 1...31. There must be at least one initiator on the network (such as a MicroLogix controller, or an SLC 5/02 or later processor).

DH-485 Configuration Parameters

When MicroLogix communications are configured for DH-485, the following parameters can be changed:

Table 28 - DF1 Full-duplex Configuration Parameters

Parameter	Options
Communication Rate	9600, 19.2K
Node Address	1...31 decimal
Token Hold Factor	1...4

See Software Considerations on page 102 for tips on setting the parameters listed above.

Devices that use the DH-485 Network

In addition to the MicroLogix 1200 controllers, the devices that are shown in Table 29 also support the DH-485 network.

Table 29 - Devices that Support a DH-485 Network

Catalog Number	Description	Installation	Function	Publication
Bulletin 1763	MicroLogix 1100	Series A or later	These controllers support DH-485 communications.	1763-UM001
Bulletin 1764	MicroLogix 1500	Series A or later	These controllers support DH-485 communications.	1764-UM001
Bulletin 1766	MicroLogix 1400	Series A or later	These controllers support DH-485 communications.	1766-UM001
Bulletin 1747 Processors	SLC 500 Processors	SLC Chassis	These processors support a variety of I/O requirements and functionality.	1747-UM011
1746-BAS	BASIC Module	SLC Chassis	Provides an interface for SLC 500 devices to foreign devices. Program in BASIC to interface the 3 channels (2 RS232 and 1 DH-485) to printers, modems, or the DH-485 network for data collection.	1746-UM004 1746-PM001 1746-RM001
1784-KTX, 1784-KTXD	PC DH-485 IM	PCI Computer Bus	Provides DH-485 using RSLinx software	1784-UM522
1784-PCMK	PCMCIA IM	PCMCIA slot in computer	Provides DH-485 using RSLinx software	1784-UM519
2711-K5A2, 2711-B5A2, 2711-K5A5, 2711-B5A5, 2711-K5A1, 2711-B5A1, 2711-K9A2, 2711-T9A2, 2711-K9A5, 2711-T9A5, 2711-K9A1, 2711-T9A1	PanelView 550 and PanelView 900 Operator Terminals	Panel Mount	Provides electronic operator interface for SLC 500 processors	2711-UM014

Important DH-485 Network Planning Considerations

Carefully plan your network configuration before installing any hardware. Some of the factors that can affect system performance are:

- Amount of electrical noise, temperature, and humidity in the network environment
- Number of devices on the network
- Connection and grounding quality in installation
- Amount of communication traffic on the network
- Type of process being controlled
- Network configuration

The major hardware and software issues you must resolve before installing a network are discussed in the following sections.

Hardware Considerations

You must decide the length of the communication cable, where you route it, and how to protect it from the environment where it will be installed.

When the communication cable is installed, you must know how many devices are to be connected during installation and how many devices can be added in the future. The following sections help you understand and plan the network.

Number of Devices and Length of Communication Cable

The maximum length of the communication cable is 1219 m (4000 ft.). This is the total cable distance from the first node to the last node in a segment. However, two segments can be used to extend the DH-485 network to 2438 m (8000 ft.). For additional information on connections using the AIC+, see the AIC+ Advanced Interface Converter User Manual, publication 1761-UM004.

Planning Cable Routes

Follow these guidelines to help protect the communication cable from electrical interference:

- Keep the communication cable at least 1.52 m (5 ft.) from any electric motors, transformers, rectifiers, generators, arc welders, induction furnaces, or sources of microwave radiation.
- If you must run the cable across power feed lines, run the cable at right angles to the lines.
- If you do not run the cable through a contiguous metallic wireway or conduit, keep the communication cable at least 0.15 m (6 in.) from AC power lines of less than 20 A, 0.30 m (1 ft.) from lines greater than 20 A, but only up to 100 kVA, and 0.60 m (2 ft.) from lines of 100 kVA or more.
- If you run the cable through a contiguous metallic wireway or conduit, keep the communication cable at least 0.08 m (3 in.) from AC power lines of less than 20 A, 0.15 m (6 in.) from lines greater than 20 A, but only up to 100 kVA, and 0.30 m (1 ft.) from lines of 100 kVA or more.

  Run the communication cable through a conduit to provide extra protection from physical damage and electrical interference. If you route the cable through a conduit, follow these additional recommendations:

  - Use ferromagnetic conduits near critical sources of electrical interference. You can use aluminum conduits in non-critical areas.
  - Use plastic connectors to couple between aluminum and ferromagnetic conduit. Make an electrical connection around the plastic connector (use pipe clamps and the heavy gauge wire or wire braid) to hold both sections at the same potential.
  - Ground the entire length of conduit by attaching it to the building earth ground.
  - Do not let the conduit touch the plug on the cable.

- Arrange the cables loosely within the conduit. The conduit should contain only serial communication cables.
- Install the conduit so that it meets all applicable codes and environmental specifications.

For more information on planning cable routes, see Industrial Automation Wiring and Grounding Guidelines, publication 1770-4.1.

Software Considerations

Software considerations include the configuration of the network and the parameters that can be set to the specific requirements of the network. The following are major configuration factors that have a significant effect on network performance:

- Number of nodes on the network
- Addresses of those nodes
- Communication rate

The following sections explain network considerations and describe ways to select parameters for optimum network performance (speed). See your programming software's user manual for more information.

Number of Nodes

The number of nodes on the network directly affects the data transfer time between nodes. Unnecessary nodes (such as a second programming terminal that is not being used) slow the data transfer rate. The maximum number of nodes on the network is 32.

Setting Node Addresses

The best network performance occurs when node addresses are assigned in sequential order. Assign initiators, such as computers, the lowest numbered addresses to minimize the time that is required to initialize the network. The valid range for the MicroLogix controllers is 1...31 (controllers cannot be node 0). The default setting is 1. The node address is stored in the controller Communications Status file (CS0:5/0 to CS0:5/7).

Setting Controller Communication Rate

The best network performance occurs at the highest communication rate, which is 19,200. 19,200 is the default communication rate for a MicroLogix device on the DH-485 network. All devices must be at the same communication rate. This rate is stored in the controller Communications Status file (CS0:5/8 to CS0:5/15).

Setting Maximum Node Address

Once you have an established network set up and are confident that you are not adding more devices, you can enhance performance by adjusting the maximum node address of your controllers. Set it to the highest node address being used.

IMPORTANT	Set all devices to the same maximum node address.

MicroLogix Remote Packet Support

MicroLogix controllers can respond and initiate with communications (or commands) that do not originate on the local DH-485 network. This is useful in installations where communication is needed between DH-485 and DH+™ networks.

The following example shows how to send messages from a device on the DH+ network to a MicroLogix controller on the DH-485 network. This method uses an SLC 5/04 processor as the bridge connection.

When using this method as shown in Figure 79:

- PLC-5 devices can send read and write commands to MicroLogix controllers.
- MicroLogix controllers can respond to MSG instructions received.
- MicroLogix controllers can initiate MSG instructions to devices on the DH+ network.
- The computer can send read and write commands to MicroLogix controllers.
- The computer can do remote programming of MicroLogix controllers.

Figure 79 - Communication Between DH-485 and DH+ Networks with MicroLogix Controllers

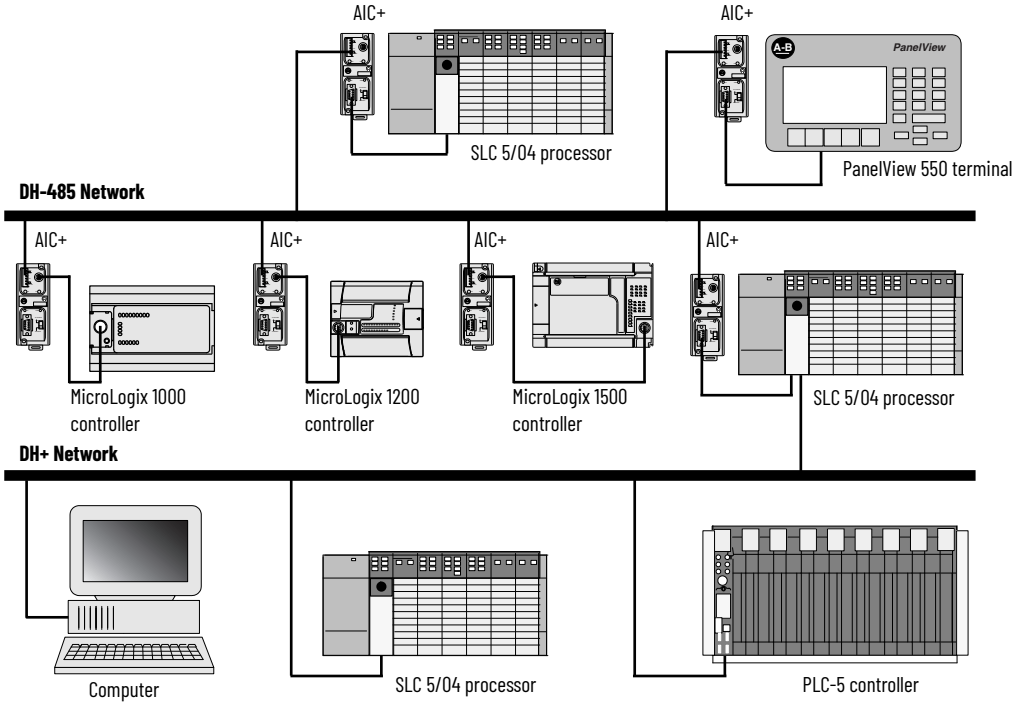

Example DH-485 Connections

The following network diagrams provide examples of how to connect MicroLogix 1200 controllers to the DH-485 network using the AIC+ Advanced Interface Converter, 1761-NET-AIC.

Figure 80 - DH-485 Network with a MicroLogix 1200 Controller

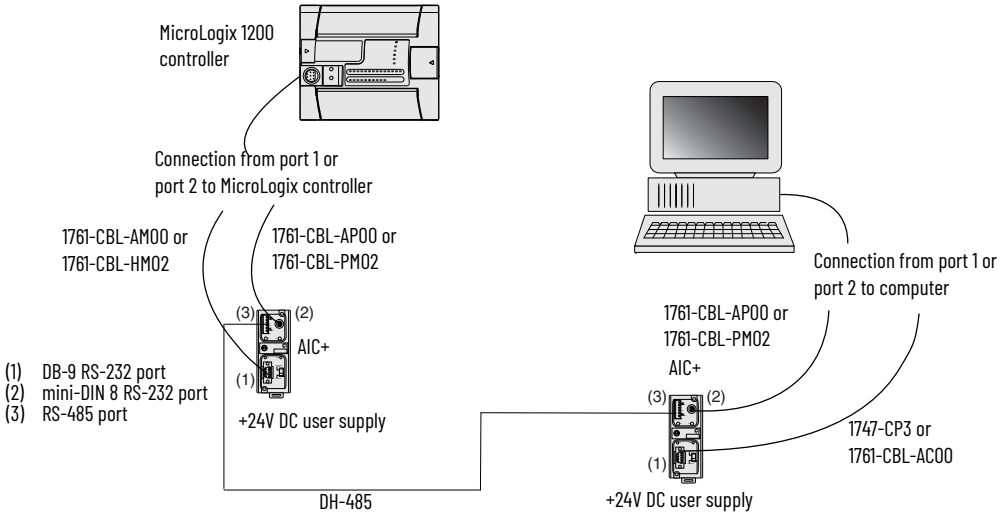

Series C or later cables are required.

Figure 81 - Typical 3-Node Network

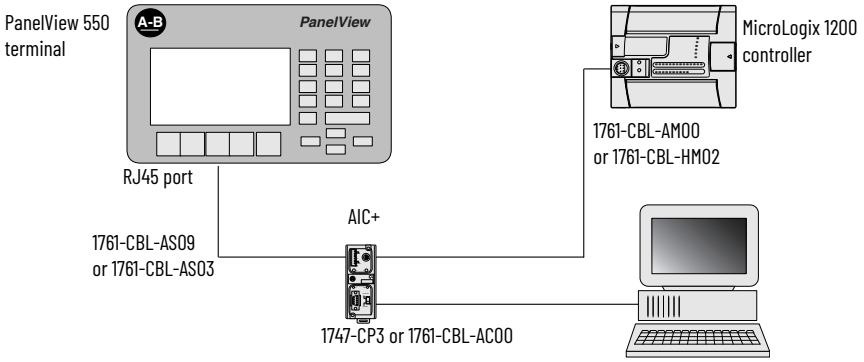

This 3-node network is not expandable.

Figure 82 - Networked Operator Interface Device and MicroLogix Controllers

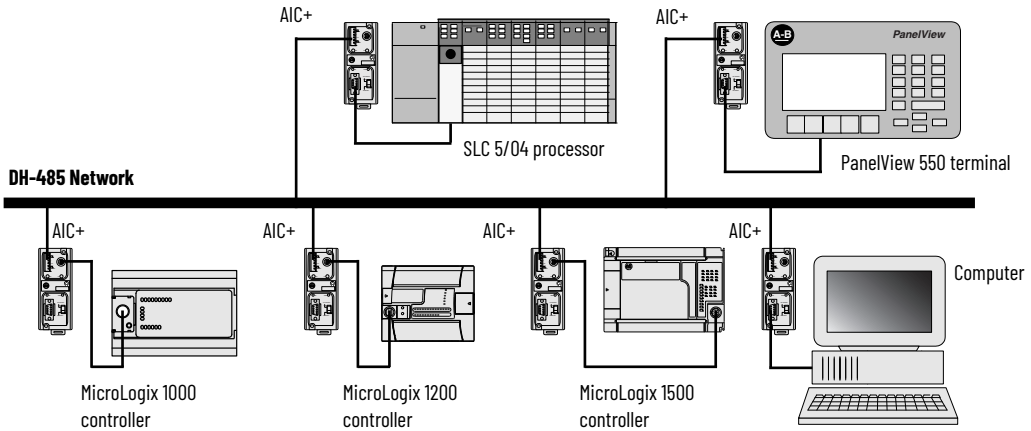

Modbus Communication Protocol

Modbus is a Half-duplex, master-slave communications protocol. The Modbus network master reads and writes coils and registers. Modbus protocol allows a single master to communicate with a maximum of 247 slave devices. MicroLogix 1200 controllers support Modbus RTU master and Modbus RTU slave protocol.

For more information on how to configure your MicroLogix 1200 controller for Modbus protocol, see the MicroLogix 1200 and MicroLogix 1500 Programmable Controllers Instruction Set Reference Manual, publication 1762-RM001. For more information about the Modbus protocol, see the Modbus Protocol Specifications (available from www.modbus.org).

ASCII

ASCII provides connection to other ASCII devices, such as barcode readers, weigh scales, serial printers, and other intelligent devices.

You can use ASCII by configuring the RS-232 port, channel 0 for the ASCII driver. For detailed configuration information, see the MicroLogix 1200 and MicroLogix 1500 Programmable Controllers Instruction Set Reference Manual, publication 1762-RM001.

System Loading and Heat Dissipation

System Loading Calculations

When you connect MicroLogix accessories and expansion I/O, an electrical load is placed on the controller power supply. This section shows how to calculate the load of your control system.

The following example is provided to illustrate system loading calculation. The system calculation procedure accounts for the amount of 5V DC and 24V DC current that is consumed by the controller, expansion I/O, and user-supplied equipment.

Use the System Loading Worksheet for 24-point Controllers on page 107 to calculate your specific 24-point controller configuration.

Use the System Loading Worksheet for 40-point Controllers on page 109 to calculate your specific 40-point controller.

Current consumed by the processor, memory modules, and the real-time clock modules has already been factored into the calculations. A system is valid if the current and power requirements are satisfied.

System Loading Example Calculations (24-point Controller)

Current Loading

Table 30 - Calculating the Current for MicroLogix Accessories

Catalog Number	Device Current Requirements		Calculated Current	
	@ 5V DC (mA)	@ 24V DC (mA)	@ 5V DC (mA)	@ 24V DC (mA)
1761-NET-AIC[1] when powered by the base unit communications port, selector switch in the up position	0	120	0	120
Subtotal 1:			**0**	**120**

(1) This is an optional accessory. Current is consumed only if the accessory is installed.

Table 31 - Calculating the Current for Expansion I/O

Catalog Number[1]	n	A	B	n x A	n x B
	Number of Modules	Device Current Requirements (max)		Calculated Current	
		@ 5V DC (mA)	@ 24V DC (mA)	@ 5V DC (mA)	@ 24V DC (mA)
1762-IA8	2	50	0	100	0
1762-IF4		40	50		
1762-IF2OF2		40	105		
1762-IQ8		50	0		
1762-IQ16		70[2]	0		
1762-IQ32T		170	0		
1762-IR4		40	50		
1762-IT4		40	50		
1762-OA8		115	0		
1762-OB8		115	0		
1762-OB16		175	0		
1762-OB32T		175	0		
1762-OF4		40	165		
1762-OV32T		175	0		
1762-OW8	2	80	90	160	180

Table 31 - Calculating the Current for Expansion I/O (Continued)

Catalog Number[1]	n	A	B	n x A	n x B
	Number of Modules	Device Current Requirements (max)		Calculated Current	
		@ 5V DC (mA)	@ 24V DC (mA)	@ 5V DC (mA)	@ 24V DC (mA)
1762-OW16		140[2]	180[2]		
1762-OX6I		110	110		
1762-IQ8OW6		110	80		
Total Modules (6 maximum):	**4**	**Subtotal 2:**		**260**	**180**

(1) See your expansion I/O Installation Instructions for Current Requirements not listed in this table.
(2) Only applicable for series B and series C I/O modules.

Validate the System

The example systems that are shown in Table 32 and Table 33 are verified to be acceptable configurations. The systems are valid because:

- Calculated Current Values < Maximum Allowable Current Values
- Calculated System Loading < Maximum Allowable System Loading

Table 32 - Validating Systems Using 1762-L24AWA, 1762-L24BXB, 1762-L24AWAR or 1762-L24BXBR

Maximum Allowable Values		Calculated Values	
Current		Current (Subtotal 1 from Table 30 + Subtotal 2 from Table 31)	
400 mA @ 5V DC	350 mA @ 24V DC	0 mA + 260 mA = 260 mA @ 5V DC	120 mA + 180 mA = 300 mA @ 24V DC
System Loading		System Loading	
10.4 W		= (260 mA x 5V) + (300 mA x 24 V) = (1300 mW) + (7200 mW) = 8500 mW = 8.50 W	

Table 33 - Validating Systems using 1762-L24BWA or 1762-L24BWAR

Maximum Allowable Values		Calculated Values	
Current for Devices Connected to the +24V DC Sensor Supply		Sum of all sensor currents	
250 mA @ 24V DC		140 mA @ 24V DC (example sensor value)	
Current for MicroLogix Accessories and Expansion I/O		Current Values (Subtotal 1 from Table 30 + Subtotal 2 from Table 31)	
400 mA @ 5V DC	350 mA @ 24V DC	0 mA + 260 mA = 260 mA @ 5V DC	120 mA + 180 mA = 300 mA @ 24V DC
System Loading		System Loading	
12 W		= (140 mA x 24 V) + (260 mA x 5 V) + (300 mA x 24 V) = (3360 mW) + (1300 mW) + (7200 mW) = 11,860 mW = 11.9 W	

System Loading Example Calculations (40-point Controller)

Current Loading

Table 34 - Calculating the Current for MicroLogix Accessories

Catalog Number	Device Current Requirements		Calculated Current	
	@ 5V DC (mA)	@ 24V DC (mA)	@ 5V DC (mA)	@ 24V DC (mA)
1761-NET-AIC[1] when powered by the base unit communications port, selector switch in the up position	0	120	0	120
Subtotal 1:			**0**	**120**

(1) This is an optional accessory. Current is consumed only if the accessory is installed.

Table 35 - Calculating the Current for Expansion I/O

Catalog Number[1]	n	A	B	n x A	n x B
	Number of Modules	Device Current Requirements (max)		Calculated Current	
		@ 5V DC (mA)	@ 24V DC (mA)	@ 5V DC (mA)	@ 24V DC (mA)
1762-IA8		50	0		
1762-IF4		40	50		
1762-IF2OF2	1	40	105	40	105
1762-IQ8		50	0		
1762-IQ16	2	70[2]	0	140[2]	0
1762-IQ32T		170	0		
1762-IR4		40	50		
1762-IT4		40	50		
1762-OA8	1	115	0	115	0
1762-OB8		115	0		
1762-OB16		175	0		
1762-OB32T		175	0		
1762-OF4		40	165		
1762-OV32T		175	0		
1762-OW8		80	90		
1762-OW16	1	140[2]	180[2]	140[2]	180[2]
1762-OX6I		110	110		
1762-IQ8OW6		110	80		
Total Modules (6 maximum):	**5**	**Subtotal 2:**		**435**	**285**

(1) See your expansion I/O Installation Instructions for Current Requirements not listed in this table.
(2) Only applicable for series B and series C I/O modules.

Validate the System

The example systems that are shown in Table 36 and Table 41 are verified to be acceptable configurations. The systems are valid because:

- Calculated Current Values < Maximum Allowable Current Values
- Calculated System Loading < Maximum Allowable System Loading

Table 36 - Validating Systems using 1762-L40AWA, 1762-L40BXB, 1762-L40AWAR or 1762-L40BXBR

Maximum Allowable Values		Calculated Values	
Current		Current (Subtotal 1 from Table 34 + Subtotal 2 from Table 35)	
600 mA @ 5V DC	500 mA @ 24V DC	0 mA + 435 mA = 435 mA @ 5V DC	120 mA + 285 mA = 405 mA @ 24V DC
System Loading		System Loading	
15 W		= (4.5 mA x 5V) + (405 mA x 24V) = (2175 mW) + (9720 mW) = 11,895 mW = 11.90 W	

System Loading Worksheet for 24-point Controllers

Table 37, Table 38, Table 39, and Table 40 are provided for system loading validation for 24-point controllers. See System Loading Example Calculations (24-point Controller) on page 105.

Current Loading

Table 37 - Calculating the Current for MicroLogix Accessories

Catalog Number	Device Current Requirements		Calculated Current	
	@ 5V DC (mA)	@ 24V DC (mA)	@ 5V DC (mA)	@ 24V DC (mA)
1761-NET-AIC[1] when powered by the base unit communications port, selector switch in the up position	0	120		
Subtotal 1:				

(1) This is an optional accessory. Current is consumed only if the accessory is installed.

Table 38 - Calculating the Current for Expansion I/O

Catalog Number[1]	n	A	B	n x A	n x B
	Number of Modules	Device Current Requirements (max)		Calculated Current	
		@ 5V DC (mA)	@ 24V DC (mA)	@ 5V DC (mA)	@ 24V DC (mA)
1762-IA8		50	0		
1762-IF4		40	50		
1762-IF2OF2		40	105		
1762-IQ8		50	0		
1762-IQ16		70[2]	0		
1762-IQ32T		170	0		
1762-IR4		40	50		
1762-IT4		40	50		
1762-OA8		115	0		
1762-OB8		115	0		
1762-OB16		175	0		
1762-OB32T		175	0		
1762-OF4		40	165		
1762-OV32T		175	0		
1762-OW8		80	90		
1762-OW16		140[2]	180[2]		
1762-OX6I		110	110		
1762-IQ8OW6		110	80		
Total Modules (6 maximum):		**Subtotal 2:**			

(1) See your expansion I/O Installation Instructions for Current Requirements not listed in this table.
(2) Only applicable for series B and series C I/O modules.

Table 39 - Validating Systems using 1762-L24AWA, 1762-L24BXB, 1762-L24AWAR or 1762-L24BXBR

Maximum Allowable Values		Calculated Values	
Current		Current (Subtotal 1 from Table 37 + Subtotal 2 from Table 38)	
400 mA @ 5V DC	350 mA @ 24V DC	mA @ 5V DC	mA @ 24V DC
System Loading		System Loading	
10.4 W		= (_____ mA x 5V) + (_____ mA x 24V) = _____ mW + _____ mW = _____ mW = _____ W	

Table 40 - Validating Systems using 1762-L24BWA or 1762-L24BWAR

Maximum Allowable Values		Calculated Values	
Current for Devices Connected to the +24V DC Sensor Supply		Sum of all sensor currents Include 1761-NET-AIC here rather than in Table 37, if it is powered externally by the sensor supply.	
250 mA @ 24V DC		mA @ 24V DC	
Current for MicroLogix Accessories and Expansion I/O		Current (Subtotal 1 from Table 37 + Subtotal 2 from Table 38)	
400 mA @ 5V DC	350 mA @ 24V DC	mA @ 5V DC	mA @ 24V DC
System Loading		System Loading	
12 W		= (_____ mA x 24 V) + (_____ mA x 5V) + (_____ mA x 24 V) = _____ mW + _____ mW + _____ mW = _____ mW = _____ W	

Table 41 - Validating Systems using 1762-L40BWA or 1762-L40BWAR

Maximum Allowable Values		Calculated Values	
Current for Devices Connected to the +24V DC Sensor Supply		Sum of all current sensors	
400 mA @ 24V DC		150 mA @ 24V DC (example sensor value)	
Current for MicroLogix Accessories and Expansion I/O		Current (Subtotal 1 from Table 34 + Subtotal 2 from Table 35)	
600 mA @ 5V DC	500 mA @ 24V DC	0 mA + 435 mA = 435 mA @ 5V DC	120 mA + 285 mA = 405 mA @ 24V DC
System Loading		System Loading	
16 W		= (150 mA x 24V) + (435 mA x 5V) + (405 mA x 24V) = (3600 mW) + (2175 mW) + (9720 mW) = 15,495 W = 15.50 W	

System Loading Worksheet for 40-point Controllers

Table 42, Table 43, Table 44, and Table 45 are provided for system loading validation for 40-point Controllers. See System Loading Example Calculations (40-point Controller) on page 106.

Current Loading

Table 42 - Calculating the Current for MicroLogix Accessories

Catalog Number	Device Current Requirements		Calculated Current	
	@ 5V DC (mA)	@ 24V DC (mA)	@ 5V DC (mA)	@ 24V DC (mA)
1761-NET-AIC[1] when powered by the base unit communications port, selector switch in the up position	0	120		
Subtotal 1:				

(1) This is an optional accessory. Current is consumed only if the accessory is installed.

Table 43 - Calculating the Current for Expansion I/O

Catalog Number[1]	n	A	B	n x A	n x B
	Number of Modules	Device Current Requirements (max)		Calculated Current	
		@ 5V DC (mA)	@ 24V DC (mA)	@ 5V DC (mA)	@ 24V DC (mA)
1762-IA8		50	0		
1762-IF4		40	50		
1762-IF2OF2		40	105		
1762-IQ8		50	0		
1762-IQ16		70[2]	0		
1762-IQ32T		170	0		
1762-IR4		40	50		
1762-IT4		40	50		
1762-OA8		115	0		
1762-OB8		115	0		
1762-OB16		175	0		

Table 43 - Calculating the Current for Expansion I/O (Continued)

Catalog Number[1]	n	A	B	n x A	n x B
	Number of Modules	Device Current Requirements (max)		Calculated Current	
		@ 5V DC (mA)	@ 24V DC (mA)	@ 5V DC (mA)	@ 24V DC (mA)
1762-OB32T		175	0		
1762-OF4		40	165		
1762-OV32T		175	0		
1762-OW8		80	90		
1762-OW16		140[2]	180[2]		
1762-OX6I		110	110		
1762-IQ8OW6		110	80		
Total Modules (6 maximum):		**Subtotal 2:**			

(1) See your expansion I/O Installation Instructions for Current Requirements not listed in this table.
(2) Only applicable for series B and series C I/O modules.

Table 44 - Validating Systems using 1762-L40AWA, 1762-L40BXB, 1762-L40AWAR or 1762-L40BXBR

Maximum Allowable Values		Calculated Values	
Current		Current (Subtotal 1 from Table 42 + Subtotal 2 from Table 43)	
600 mA @ 5V DC	500 mA @ 24V DC	mA @ 5V DC	mA @ 24V DC
System Loading		System Loading	
15 W		= (_____ mA x 5V) + (_____ mA x 24V) = _____ mW + _____ mW = _____ mW = _____ W	

Table 45 - Validating Systems using 1762-L40BWA or 1762-L40BWAR

Maximum Allowable Values		Calculated Values	
Current for Devices Connected to the +24V DC Sensor Supply		Sum of all sensor currents Include 1761-NET-AIC here rather than in Table 42, if it is powered externally by the sensor supply.	
400 mA @ 24V DC		mA @ 24V DC	
Current for MicroLogix Accessories and Expansion I/O		Current (Subtotal 1 from Table 42 + Subtotal 2 from Table 43)	
600 mA @ 5V DC	500 mA @ 24V DC	mA @ 5 V DC	mA @ 24V DC
System Loading		System Loading	
16 Watts		= (_____ mA x 24V) + (_____ mA x 5V) + (_____ mA x 24V) = _____ mW + _____ mW + _____ mW = _____ mW = _____ W	

Calculating Heat Dissipation

Use Table 46 when you must determine the heat dissipation of your system for installation in an enclosure. For System Loading, take the value from the appropriate System Loading Worksheet for 24-point Controllers on page 107 or System Loading Worksheet for 40-point Controllers on page 109.

Table 46 - Heat Dissipation

Catalog Number	Heat Dissipation		
	Equation or Constant	Calculation	Sub-Total
1762-L24AWA, 1762-L24AWAR	15.2 W + (0.4 x System Loading)	15.2 W + (0.4 x _____ W)	_____ W
1762-L24BWA, 1762-L24BWAR	15.7 W + (0.4 x System Loading)	15.7 W + (0.4 x _____ W)	_____ W
1762-L24BXB, 1762-L24BXBR	17.0 W + (0.3 x System Loading)	17.0 W + (0.3 x _____ W)	_____ W
1762-L40AWA, 1762-L40AWAR	21.0 W + (0.4 x System Loading)	21.0 W + (0.4 x _____ W)	_____ W
1762-L40BWA, 1762-L40BWAR	22.0 W + (0.4 x System Loading)	22.0 W + (0.4 x _____ W)	_____ W
1762-L40BXB, 1762-L40BXBR	27.9 W + (0.3 x System Loading)	27.9 W + (0.3 x _____ W)	_____ W
1762-IA8	2.0 W x number of modules	2.0 W x _____	_____ W
1762-IF4	2.0 W x number of modules	2.0 W x _____	_____ W
1762-IF2OF2	2.6 W x number of modules	2.6 W x _____	_____ W

Table 46 - Heat Dissipation (Continued)

Catalog Number	Heat Dissipation		
	Equation or Constant	Calculation	Sub-Total
1762-IQ8	3.7 W x number of modules	3.7 W x _____	_____ W
1762-IQ16	5.1 W[1] x number of modules	5.1 W[1] x _____	_____ W
1762-IQ32T	6.8 W x number of modules (@ 30V DC) 5.4 W x number of modules (@ 26.4V DC)	6.8 W x _____ (@ 30V DC) 5.4 W x _____ (@ 26.4V DC)	_____ W _____ W
1762-IR4	1.5 W x number of modules	1.5 W x _____	_____ W
1762-IT4	1.5 W x number of modules	1.5 W x _____	_____ W
1762-OA8	2.9 W x number of modules	2.9 W x _____	_____ W
1762-OB8	1.6 W x number of modules	1.6 W x _____	_____ W
1762-OB16	2.9 W x number of modules	2.9 W x _____	_____ W
1762-OB32T	3.4 W x number of modules	3.4 W x _____	_____ W
1762-OF4	2.8 W x number of modules	2.8 W x _____	_____ W
1762-OV32T	2.7 W x number of modules	2.7 W x _____	_____ W
1762-OW8	2.9 W x number of modules	2.9 W x _____	_____ W
1762-OW16	6.1 W[1] x number of modules	6.1 W[1] x _____	_____ W
1762-OX6I	2.8 W x number of modules	2.8 W x _____	_____ W
1762-IQ8OW6	5.0 W x number of modules (@ 30V DC) 4.4 W x number of modules (@ 26.4V DC)	5.0 W x _____ 4.4 W x _____	_____ W _____ W
Add Subtotals to Determine Heat Dissipation			**_____ W**

(1) Only applicable for series B and series C I/O modules.

Notes:

The following terms and abbreviations are used throughout this manual.

address A character string that uniquely identifies a memory location. For example, I:1/0 is the memory address for the data located in the Input file location word1, bit 0.

AIC+ Advanced Interface Converter A device that provides a communication link between various networked devices. 1761-NET-AIC.

application 1) A machine or process monitored and controlled by a controller.
2) The use of computer-based or processor-based routines for specific purposes.

baud rate The speed of communication between devices. All devices must communicate at the same baud rate on a network.

bit The smallest storage location in memory that contains either a 1 (ON) or a 0 (OFF).

block diagrams A schematic drawing.

Boolean operators Logical operators such as AND, OR, NAND, NOR, NOT, and Exclusive-OR that can be used singularly or in combination to form logic statements or circuits. Can have an output response of T or F.

branch A parallel logic path within a rung of a ladder program.

communication scan A part of the controller's operating cycle. Communication with other devices, such as software running on a personal computer, takes place.

controller A device, such as a programmable controller, used to monitor input devices and control output devices.

controller overhead An internal portion of the operating cycle used for housekeeping and set-up purposes.

control profile The means by which a controller determines which outputs turn on under what conditions.

counter 1) An electro-mechanical relay-type device that counts the occurrence of some event. May be pulses developed from operations such as switch closures or interruptions of light beams.
2) In controllers, a software counter eliminates the need for hardware counters. The software counter can be given a preset count value to count up or down whenever the counted event occurs.

CPU (Central Processing Unit) The decision-making and data storage section of a programmable controller.

data table The part of processor memory that contains I/O values and files where data is monitored, manipulated, and changed for control purposes.

DIN rail Manufactured according to Deutsche Industrie Normenausshus (DIN) standards, a metal railing designed to ease installation and mounting of your controller.

download Data is transferred from a programming or storage device to another device.

DTE (Data Terminal Equipment) Equipment that is attached to a network to send or receive data, or both.

embedded I/O Embedded I/O is the controller's on-board I/O.

EMI Electromagnetic interference.

encoder 1) A rotary device that transmits position information.
2) A device that transmits a fixed number of pulses for each revolution.

executing mode Any run or test mode.

expansion I/O Expansion I/O is I/O that is connected to the controller via a bus or cable. MicroLogix 1200 controllers use Bulletin 1762 expansion I/O.

false The status of an instruction that does not provide a continuous logical path on a ladder rung.

FIFO (First-In-First-Out) The order that data is entered into and retrieved from a file.

file A collection of information organized into one group.

full-duplex A bidirectional mode of communication where data may be transmitted and received simultaneously (contrast with half-duplex).

half-duplex A communication link in which data transmission is limited to one direction at a time.

hard disk A storage area in a personal computer that may be used to save processor files and reports for future use.

high byte Bits 8...15 of a word.

input device A device, such as a push button or a switch, that supplies signals to the input circuits of the controller.

inrush current The temporary surge current produced when a device or circuit is initially energized.

instruction A mnemonic and data address defining an operation to be performed by the processor. A rung in a program consists of a set of input and output instructions. The input instructions are evaluated by the controller as being true or false. In turn, the controller sets the output instructions to true or false.

instruction set The set of general purpose instructions available with a given controller.

I/O (Inputs and Outputs) Consists of input and output devices that provide and/or receive data from the controller.

jump Change in normal sequence of program execution, by executing an instruction that alters the program counter (sometimes called a branch). In ladder programs a JUMP (JMP) instruction causes execution to jump to a labeled rung.

ladder logic A program written in a format resembling a ladder-like diagram. The program is used by a programmable controller to control devices.

least significant bit (LSB) The digit (or bit) in a binary word (code) that carries the smallest value of weight.

LED (Light Emitting Diode) Used as status indicator for processor functions and inputs and outputs.

LIFO (Last-In-First-Out) The order that data is entered into and retrieved from a file.

low byte Bits 0...7 of a word.

logic A process of solving complex problems through the repeated use of simple functions that can be either true or false. General term for digital circuits and programmed instructions to perform required decision making and computational functions.

Master Control Relay (MCR) A mandatory hard-wired relay that can be de-energized by any series-connected emergency stop switch. Whenever the MCR is de-energized, its contacts open to de-energize all application I/O devices.

mnemonic A simple and easy to remember term that is used to represent a complex or lengthy set of information.

modem Modulator/demodulator. Equipment that connects data terminal equipment to a communication line.

modes Selected methods of operation. Example: run, test, or program.

negative logic The use of binary logic in such a way that "0" represents the voltage level normally associated with logic 1 (for example, 0 = +5V, 1 = 0V). Positive is more conventional (for example, 1 = +5V, 0 = 0V).

network A series of stations (nodes) connected by some type of communication medium. A network may be made up of a single link or multiple links.

nominal input current The current at nominal input voltage.

normally closed Contacts on a relay or switch that are closed when the relay is de-energized or the switch is deactivated; they are open when the relay is energized or the switch is activated. In ladder programming, a symbol that allows logic continuity (flow) if the referenced input is logic "0" when evaluated.

normally open Contacts on a relay or switch that are open when the relay is de-energized or the switch is deactivated. (They are closed when the relay is energized or the switch is activated.) In ladder programming, a symbol that allows logic continuity (flow) if the referenced input is logic "1" when evaluated.

off-delay time The OFF delay time is a measure of the time required for the controller logic to recognize that a signal has been removed from the input terminal of the controller. The time is determined by circuit component delays and by any filter adjustment applied.

offline Describes devices not under direct communication.

offset The steady-state deviation of a controlled variable from a fixed point.

off-state leakage current When an ideal mechanical switch is opened (off-state) no current flows through the switch. Practical semiconductor switches, and the transient suppression components which are sometimes used to protect switches, allow a small current to flow when the switch is in the off state. This current is referred to as the off-state leakage current. To ensure reliable operation, the off-state leakage current rating of a switch should be less than the minimum operating current rating of the load that is connected to the switch.

on-delay time The ON delay time is a measure of the time required for the controller logic to recognize that a signal has been presented at the input terminal of the controller.

one-shot A programming technique that sets a bit for only one program scan.

online Describes devices under direct communication. For example, when RSLogix 500 is monitoring the program file in a controller.

operating voltage For inputs, the voltage range needed for the input to be in the On state. For outputs, the allowable range of user-supplied voltage.

output device A device, such as a pilot light or a motor starter coil, that is controlled by the controller.

processor A Central Processing Unit. See CPU (Central Processing Unit) on page 113.

processor file The set of program and data files used by the controller to control output devices. Only one processor file may be stored in the controller at a time.

program file The area within a processor file that contains the ladder logic program.

program mode When the controller is not executing the processor file and all outputs are de-energized.

program scan A part of the controller's operating cycle. During the scan the ladder program is executed and the output data file is updated based on the program and the input data file.

programming device Executable programming package used to develop ladder diagrams.

protocol The packaging of information that is transmitted across a network.

read To acquire data from a storage place. For example, the processor reads information from the input data file to solve the ladder program.

relay An electrically operated device that mechanically switches electrical circuits.

relay logic A representation of the program or other logic in a form normally used for relays.

restore To download (transfer) a program from a personal computer to a controller.

reserved bit A status file location that the user should not read or write to.

retentive data Information associated with data files (timers, counters, inputs, and outputs) in a program that is preserved through power cycles.

RS-232 An EIA standard that specifies electrical, mechanical, and functional characteristics for serial binary communication circuits. A single-ended serial communication interface.

run mode This is an executing mode during which the controller scans or executes the ladder program, monitors input devices, energizes output devices, and acts on enabled I/O forces.

rung Ladder logic is comprised of a set of rungs. A rung contains input and output instructions. During Run mode, the inputs on a rung are evaluated to be true or false. If a path of true logic exists, the outputs are made true. If all paths are false, the outputs are made false.

save To upload (transfer) a program stored in memory from a controller to a personal computer; OR to save a program to a computer hard disk.

scan time The time required for the controller to execute the instructions in the program. The scan time may vary depending on the instructions and each instruction's status during the scan.

sinking A term used to describe current flow between an I/O device and controller I/O circuit — typically, a sinking device or circuit provides a path to ground, low, or negative side of power supply.

sourcing A term used to describe current flow between an I/O device and controller I/O circuit — typically, a sourcing device or circuit provides a path to the source, high, or positive side of power supply.

status The condition of a circuit or system, represented as logic 0 (OFF) or 1 (ON).

terminal A point on an I/O module that external I/O devices, such as a push button or pilot light, are wired to.

throughput The time between when an input turns on and the corresponding output turns on.

true The status of an instruction that provides a continuous logical path on a ladder rung.

upload Data is transferred to a programming or storage device from another device.

watchdog timer A timer that monitors a cyclical process and is cleared at the conclusion of each cycle. If the watchdog runs past its programmed time period, it causes a fault.

workspace The main storage available for programs and data and allocated for working storage.

write To copy data to a storage device. For example, the processor writes the information from the output data file to the output modules.

Numerics

1762-24AWA wiring diagram 35
1762-40BWA sourcing wiring diagram 37
1762-IA8 wiring diagram 40
1762-IF2OF2
- input type selection 47
- output type selection 47
- terminal block layout 48
- wiring 48

1762-IF4
- input type selection 49
- terminal block layout 50

1762-IQ16 wiring diagram 41
1762-IQ32T wiring diagram 42
1762-IQ8 wiring diagram 40
1762-IQ8OW6 wiring diagram 46
1762-OA8 wiring diagram 42
1762-OB16 wiring diagram 43
1762-OB32T wiring diagram 44
1762-OB8 wiring diagram 43
1762-OV32T wiring diagram 44
1762-OW16 wiring diagram 45
1762-OW8 wiring diagram 45
1762-OX6I wiring diagram 46

A

address 113
Advanced Interface Converter. See AIC+
AIC+
- apply power to 65
- attach to the network 64
- connect 61
- connecting
  - isolated modem 56
- definition 113
- install 64
- modem connections 56
- recommended user supplied components 64
- safety consideration 64
- select cable 62

analog expansion I/O 92
- diagnostics 92
- module operation vs. channel operation 92
- power-up diagnostics 92
- system wiring guidelines 47
- troubleshooting 92

application 113

B

battery 70
baud rate 113
bit 113
block diagrams 113
Boolean operators 113
branch 113

C

cables
- planning routes for DH485 connections 101
- selection guide for the AIC+ 62

call for assistance 94
common mode rejection ratio
- specification 84

communication connections 53
communication options 11
communication protocols
- DF1 Full-duplex 97
- DF1 Half-duplex 98
- DH485 99
- Modbus 104

communication scan 113
communications toggle push button
- use 54

component descriptions 10
- 1762 expansion I/O 10
- communication cables 11
- memory module 10
- real-time clock 10

configuration errors 93
connect expansion I/O 24
connect the system
- AIC+ 61, 64
- DF1 Full-Duplex protocol 54
- DF1 isolated point-to-point connection 55
- DH485 network 59

connect to DF1 Half-Duplex network 58
contactors (bulletin 100), surge suppressors for 30
control profile 113
ControlFLASH
- missing/corrupt OS LED pattern 96
- sequence of operation 96
- use 95

controller 113
- ground 30
- I/O wiring 40
- LED status 89
- LED status error conditions 90
- LED status normal operation 90
- minimize electrical noise 40
- mount 20
- mount on DIN rail 21
- mount on panel 22
- mounting dimensions 20
- prevent excessive heat 15

controller overhead 113
controller spacing 20
counter 113
CPU (Central Processing Unit) 113

D

data table 113
default communication configuration 53

DF1 Full-Duplex protocol
connect 54, 55
DF1 Full-duplex protocol
description 97
example system configuration 97
use a modem 55
using a modem 99
DF1 Half-Duplex protocol
description 98
DH485 communication protocol
configuration parameters 100
DH485 network
configuration parameters 102
connect 59
devices that use the network 100
example system configuration 103
installation 59
planning considerations 101
DIN rail 113
disconnect main power 14
download 113
DTE (Data Terminal Equipment) 113

E

Electronics Industries Association (EIA) 97
EMI 113
encoder 113
error recovery model 91
errors
configuration 93
critical 92
extended error information field 93
hardware 93
module error field 92
non-critical 92
executing mode 114
expansion I/O
1762-IF2OF2 input type selection 47
1762-IF2OF2 output type selection 47
expansion I/O mount 24
expansion I/O wiring 40
1762-IA8 wiring diagram 40
1762-IF2OF2 wiring 48
1762-IF4 terminal block layout 50
1762-IQ16 wiring diagram 41
1762-IQ32T wiring diagram 42
1762-IQ8 wiring diagram 40
1762-IQ8OW6 wiring diagram 46
1762-OA8 wiring diagram 42
1762-OB16 wiring diagram 43
1762-OB32T wiring diagram 44
1762-OB8 wiring diagram 43
1762-OV32T wiring diagram 44
1762-OW16 wiring diagram 45
1762-OW8 wiring diagram 45
1762-OX6I wiring diagram 46
analog wiring guidelines 47
extended error information field 93

F

false 114
FIFO (First-In-First-Out) 114
file 114
Full-duplex 55
full-duplex 114

G

general considerations 13
ground the controller 30

H

Half-duplex 58, 114
hard disk 114
hardware errors 93
hardware features 9
heat dissipation
calculating 110
heat protection 15
high byte 114

I

I/O (Inputs and Outputs) 114
input device 114
input states on power down 15
inrush current 114
install
ControlFLASH software 95
memory module 19
install real-time clock 19
instruction 114
instruction set 114
isolated link coupler
install 59
isolation transformers
power considerations 15

J

jump 114

L

ladder logic 114
least significant bit (LSB) 114
LED (Light Emitting Diode) 114
LIFO (Last-In-First-Out) 114
logic 114
low byte 114

M

master control relay 16
emergency-stop switches 16
using ANSI/CSA symbols schematic 18
using IEC symbols schematic 17
Master Control Relay (MCR) 114
master control relay circuit
periodic tests 14

memory module
data file protection 71
operation 70
program compare 70
program/data backup 70
removal/installation under power 71
write protection 71
minimize electrical noise 40
mnemonic 114
Modbus communication protocol 104
modem 114
modem cable
construct your own 57
modems
use with MicroLogix controllers 99
modes 115
module error field 92
motor starters (bulletin 509)
surge suppressors 30
motor starters (bulletin 709)
surge suppressors 30
mount expansion I/O 23
mount on DIN rail 23

N

negative logic 115
network 115
nominal input current 115
normally closed 115
normally open 115
null modem cable 57

O

offline 115
offset 115
off-state leakage current 115
one-shot 115
online 115
operating voltage 115
output device 115

P

planning considerations for a network 101
power considerations
input states on power down 15
isolation transformers 15
loss of power source 15
other line conditions 15
overview 15
power supply inrush 15
power distribution 14
power source
loss of 15
power supply inrush
power considerations 15
prepare for upgrade 95
prevent excessive heat 15
processor 115
processor file 115
program 11
program file 115
program mode 115
program scan 115
programming device 115
protocol 116

R

read 116
real-time clock
battery operation 70
disable 69
operation 69
removal/installation under power 69
write data 69
relay 116
relay logic 116
relays
surge suppressors for 30
remote packet support 102
replacement parts 87
reserved bit 116
restore 116
retentive data 116
RS-232 116
RS-232 communication interface 97
run mode 116
rung 116

S

safety circuits 14
safety considerations 13
disconnect main power 14
hazardous location 13
master control relay circuit
periodic tests 14
periodic tests of master control relay circuit 14
power distribution 14
safety circuits 14
save 116
scan time 116
sinking 116
sinking and sourcing wiring diagrams 34
sinking wiring diagram
1762-24BWA 35
sourcing 116
sourcing wiring diagram
1762-24BWA 36
status 116
surge suppressors
for contactor 30
for motor starters 30
for relays 30
recommended 30
use 29
system configuration
DF1 Full-duplex examples 97
DH485 connection examples 103

system loading
calculations 105
example calculations 105
worksheet 107
system loading and heat dissipation 105

T

terminal 116
terminal block layouts
1762-IF2OF2 48
1762-IF4 50
controllers 31
terminal groupings 33
terminal groupings 33
throughput 116
Trimpot Information Function File 67
trimpot operation 67
trimpots 67
adjustment 67
error conditions 67
location 67
troubleshoot your system 89
true 116

U

upload 116
use communications toggle push button 54
use emergency-stop switches 16
use memory modules 69
use real-time clock 69
use trimpots 67

W

wire your controller 27
wiring diagram
1762-IA8 40
1762-IF2OF2 differential sensor 48
1762-IF2OF2 single-ended sensor 49
1762-IQ16 41
1762-IQ32T 42
1762-IQ8 40
1762-IQ8OW6 46
1762-L24AWA input 35
1762-L24AWA output 37
1762-L24BWA output 37
1762-L24BWA sinking 35
1762-L24BWA sourcing 36
1762-L24BXB output 37
1762-L24BXB sinking 36
1762-L24BXB sourcing 36
1762-L40AWA input 37
1762-L40AWA output 39
1762-L40BWA output 39
1762-L40BWA sourcing 38
1762-L40BXB output 39
1762-L40BXB sinking 38
1762-L40BXB sourcing 39
1762-OA8 42
1762-OB16 43
1762-OB32T 44
1762-OB8 43
1762-OV32T 44
1762-OW16 45
1762-OW8 45
1762-OX6I 46
terminal block layouts 31, 48, 50
wiring diagrams 31
workspace 116
write 116