SNAP PAC S-SERIES CONTROLLERS

Features

- Powerful standalone industrial controller
- Two independent 10/100 Mbps Ethernet interfaces for use on standard Ethernet networks
- RS-232 and RS-485 serial ports for connection to serial devices, including Opto 22 serial I/O units and PPP host communication.
- Multiple protocol support: TCP/IP, HTTP/HTTPS, EtherNet/IP™, Modbus®/TCP, SNMP, SMTP, FTP, and OptoMMP™
- IIoT and developer ready with a RESTful API to securely access data
- FTP server/client capability; includes file system and removable storage (microSD card)
- Use two identical models for controller redundancy



SNAP-PAC-S2 controller

DESCRIPTION

A SNAP PAC S-series programmable automation controller (PAC) provides powerful, real-time control and communication to meet your industrial control, monitoring, Industrial Internet of Things (IIoT), and data acquisition needs. As part of the Opto 22 SNAP PAC System, one of these compact, industrially hardened controllers can handle multiple control, automation, and data acquisition tasks involving digital and analog control, serial string handling, PID, and enterprise and Internet connectivity.

Connecting to Opto 22 serial- and Ethernet-based I/O systems, a SNAP PAC S-series controller runs control programs written in Opto 22's PAC Control™ software to monitor and control a wide range of devices and equipment. SNAP PAC S-series controllers are well suited to original equipment manufacturers (OEMs), system integrators, and end-users in process control, discrete manufacturing, or hybrid industries and applications.

SNAP PAC S-series controllers include a RESTful API (representational state transfer application program interface), so you can use the language of your choice to securely access controller tag data and use it for business purposes.

Ethernet Communication

All SNAP PAC S-series programmable automation controllers communicate over standard 10/100 Mbps Ethernet networks. The controllers can also be used in an independent control network built with standard, off-the-shelf Ethernet hardware.

SNAP PAC S-series controllers include two 10/100 Mbps Ethernet interfaces for networking through an Ethernet switch to Ethernet hosts, as well as SNAP PAC brains and I/O, which provide local intelligence and the connections to digital and analog sensors and actuators as well as serial devices. The Ethernet interfaces support Auto MDI-X, which means you can use a standard straight-through Ethernet cable; a crossover cable is not needed for direct connection to a PC.

The two independent Ethernet ports have separate IP addresses that can be used with PAC Project™ Professional software to set up redundant network links to safeguard the availability and reliability of an I/O system, or to segment a control system's network from the enterprise LAN.

Part Numbers

Part	Description
SNAP-PAC-S1	Ethernet-based programmable automation controller with 2 Ethernet interfaces, RESTful API
SNAP-PAC-S1-FM **[OBSOLETE]**	**[OBSOLETE]** Ethernet-based programmable automation controller with 2 Ethernet interfaces, RESTful API
SNAP-PAC-S2	Ethernet-based programmable automation controller with 2 Ethernet interfaces and 4 serial ports, RESTful API
SNAP-PSDIN	SNAP-PAC-S1 controller DIN-rail adapter
SNAP-S2DIN	SNAP-PAC-S2 controller DIN-rail adapter

© 2005–2026 Opto 22. All rights reserved. Dimensions and specifications are subject to change. Brand or product names used herein are trademarks or registered trademarks of their respective companies or organizations.

Serial Communication

SNAP PAC S-series controllers provide RS-232 and RS-485 communication as follows:

The **SNAP-PAC-S1** has two RS-232 serial ports that support general-purpose communication with serial devices; you can send and receive data from one or two serial devices connected directly to the controller. Port 0 can be connected to a modem using PPP (Point-to-Point Protocol). This controller also has one pluggable two-wire RS-485 port that can be used for SNAP PAC or *mistic* serial I/O units. For additional serial interfaces, you can add one or more SNAP serial communication modules on SNAP PAC racks connected to the controller.

The **SNAP-PAC-S2** has four serial ports that can each be configured using PAC Manager as either RS-232 or RS-485 (2-wire or 4-wire). These serial ports can be used for I/O or for general-purpose serial communication. For the default configuration settings of these ports, see the *SNAP PAC S-series User's Guide* (form 1592).

Configured as RS-232, the ports support remote serial device communication, and any one of the ports can be configured as a PPP modem connection for creating a TCP/IP network over PSTN (Public Switched Telephone Network) lines. Configured as RS-485, the serial ports connect to legacy Opto 22 *mistic*™ I/O units, including the serial B3000 brain and remote *mistic* bricks, and to SNAP PAC SB-series serial brains.

For additional serial host interfaces, you can add one or more SNAP serial communication modules on attached SNAP Ethernet-based I/O units.

Backward Compatibility

S-series controllers have RS-485 serial interfaces for connecting to Opto 22's legacy *mistic* I/O units. The SNAP-PAC-S1 has one RS-485 port, and the SNAP-PAC-S2 can be configured with up to four.

This connectivity with legacy serial-based I/O systems, combined with PAC Control Professional's ability to import control programs (or *strategies*) written in legacy OptoControl™ software, provides a migration path to integrate older Opto 22 I/O systems into modern control hardware running on Ethernet networks.

For detailed information on updating control strategies and integrating legacy control hardware into modern systems, see the *FactoryFloor to PAC Project Migration Technical Note* (form 1692).

Forward Compatibility

SNAP PAC S-series controllers are also compatible with newer *groov* EPIC processors and *groov* RIO edge I/O units, which add industrial IoT data communications and security features to your system. Both *groov* EPIC and *groov* RIO can be used as I/O units with an S-series controller.

If you're not using serial-based I/O units with your system, you should purchase a *groov* EPIC processor instead of a SNAP PAC S-series controller. *groov* EPIC includes many additional programming and communication options and is rated for hazardous locations. For more information, see the *groov* EPIC system on our website or contact our pre-sales engineers.

SOFTWARE

SNAP PAC controllers use Opto 22's **PAC Project** Microsoft® Windows®-compatible automation software for control programming, human-machine-interface (HMI) development, and OPC and database connectivity. Two versions of PAC Project are available:

- **PAC Project Basic** includes PAC Control for developing control programs, PAC Display™ for creating operator interfaces, and PAC Manager™ configuration software.
- **PAC Project Professional** adds expanded versions of PAC Control and PAC Display, plus OptoOPCServer™ software for exchanging data with OPC 2.0-compliant client software applications, OptoDataLink™ for exchanging SNAP PAC System data with ODBC-compliant databases, and a SoftPAC™ software-based controller for PC-based control.

Applications included in the PAC Project software suite are:

PAC Control Basic is a graphical, flowchart-based programming tool for machine control and process applications. Using PAC Control, you create, download, and run strategies on a SNAP PAC controller. In addition to flowchart programming with subroutine capability, PAC Control includes a powerful, built-in scripting language based on C and other procedural languages. **PAC Control Professional** adds capabilities to import OptoControl strategies, to support *mistic* I/O units, and to use a SNAP PAC controller's independent Ethernet ports to segment communication links.

PAC Display Basic is an intuitive HMI package for building operator interfaces, or *projects*, for communicating with a SNAP PAC controller. PAC Display offers a full-featured HMI including alarming, trending, and a built-in library of 3,000 industrial automation graphics. **PAC Display Professional** adds the ability to import projects created in OptoDisplay, part of the Opto 22 FactoryFloor® software suite, and to use redundant communication links on SNAP PAC controllers. PAC Display Professional can also connect to Ethernet-based FactoryFloor controllers running OptoControl strategies or ioProject controllers running ioControl strategies.

OptoOPCServer (PAC Project Professional only) is a fast, efficient OPC 2.0-compliant server for communicating with many Opto 22

© 2005–2026 Opto 22. All rights reserved. Dimensions and specifications are subject to change. Brand or product names used herein are trademarks or registered trademarks of their respective companies or organizations.

TECHNICAL SPECIFICATIONS

Specifications are continued on the following page.

Specification	SNAP-PAC-S1 SNAP-PAC-S1-FM[2]	SNAP-PAC-S2
Processor	266 MHz 32-bit ColdFire® 5475 with integrated floating-point unit (FPU)	
Memory	**Total RAM:** 32 MB **Total RAM for PAC Control Strategies:** 16 MB **Battery-backed RAM:** 8 MB **RAM File Storage:** 2.5 MB **Flash File Storage:** 4 MB	
Removable storage	**Models with manufacture dates of June 2014 and newer** (requires firmware R9.4a or higher and loader R6.1a or higher): MicroSD card slot supports microSD or microSDHC cards to 32 GB. **Models with manufacture dates of November 2008 through May 2014** (with firmware R8.4 or higher): MicroSD card slot supports microSD cards up to 2 GB.	
Backup battery	**SNAP-PAC-S1s with serial number 625654 or higher and all SNAP-PAC-S2s:** Rechargeable (recharges whenever the brain has power), 1-year power-off data retention (replacement part number: SNAP-PAC-BATTERY-ML2430). **SNAP-PAC-S1s with serial number 625653 or lower:** User-replaceable 3.6-volt TL 5242 /W lithium, 10-year minimum power-off data retention (replacement part number: G4BATT32).	
Ethernet communication	Two independent 10/100 Mbps Ethernet network interfaces (RJ-45 connectors). Each interface has a separate IP address (separate subnet). Connects to host (maximum 31 connections to port 22001)[3] and I/O (maximum 15 connections to port 2001). Supports Auto MDI-X (crossover cable not needed).	
Serial communication	**RS-232 serial:** Two RS-232 serial ports (one DB-9 and one pluggable connector); one port has full handshaking. PPP is supported only on port 0. Buffer size: 512 bytes each for RX and TX. **RS-485 serial:** One RS-485 serial port (pluggable connector); two-wire RS-485; optional *mistic* signal interrupts. **Range (serial multidrop):** 32 stations maximum on a segment (including PC, controller, and I/O units); up to 3000 ft (914 m) on a segment. **Buffer size:** 512 bytes each for RX and TX.	Four serial ports that can be used as general purpose ports or for serial I/O units; each port is software configurable as either RS-232 (Tx, Rx, COM, DTR, DCD, RTS, CTS) or as RS-485 (2-wire, 4-wire, optional termination, optional biasing); optional *mistic* signal interrupts. **Buffer size:** 512 bytes each for RX and TX.
Power requirements	8–32 VDC ±0.5, 11.3 VA maximum (SNAP-PAC-S1 controllers with serial numbers below 500,000 use 8–24 VDC)	8–32 VDC ±0.5, 11.3 VA maximum
Environmental	**Operating temperature:** -20 °C to 60 °C **Storage temperature:** -40 °C to 85 °C **Humidity:** 0% to 95% relative humidity, non-condensing	
Software	**PAC Project Basic:** Includes programming, HMI software, and configuration software; included with purchase of controller. **PAC Project Professional:** PAC Project Basic plus OPC 2.0-compliant OPC server, OptoControl strategy and OptoDisplay project importing, support for serial *mistic* I/O units, and Ethernet link redundancy support. **RESTful API[1]:** Use HTTPS to access data (read/write or read-only) from controller tags using your chosen programming language. Data returned in JSON. More information at developer.opto22.com.	
Number of charts that can run simultaneously	32	

© 2005–2026 Opto 22. All rights reserved. Dimensions and specifications are subject to change. Brand or product names used herein are trademarks or registered trademarks of their respective companies or organizations.

Specification	SNAP-PAC-S1 SNAP-PAC-S1-FM[2]	SNAP-PAC-S2
Other features	• Multiple protocol support including TCP/IP, HTTP/HTTPS, FTP, SNMP v2.0c (with firmware 8.2a), Modbus/TCP, EtherNet/IP®, and OptoMMP™ • Real-time clock • FTP server/client with file system (in RAM and in removable storage) • Ethernet link redundancy or network segmenting	
Agency certifications	All models: CE, RoHS, DFARS; UKCA	
Warranty	30 months from date of manufacture	

[1] Requires firmware R9.5a or higher.

[2] OBSOLETE product. Please contact Pre-Sales Engineering for more information.

[3] Host performance may deteriorate near maximum.

© 2005–2026 Opto 22. All rights reserved. Dimensions and specifications are subject to change. Brand or product names used herein are trademarks or registered trademarks of their respective companies or organizations.

SNAP-PAC-S1 CONNECTORS AND INDICATORS

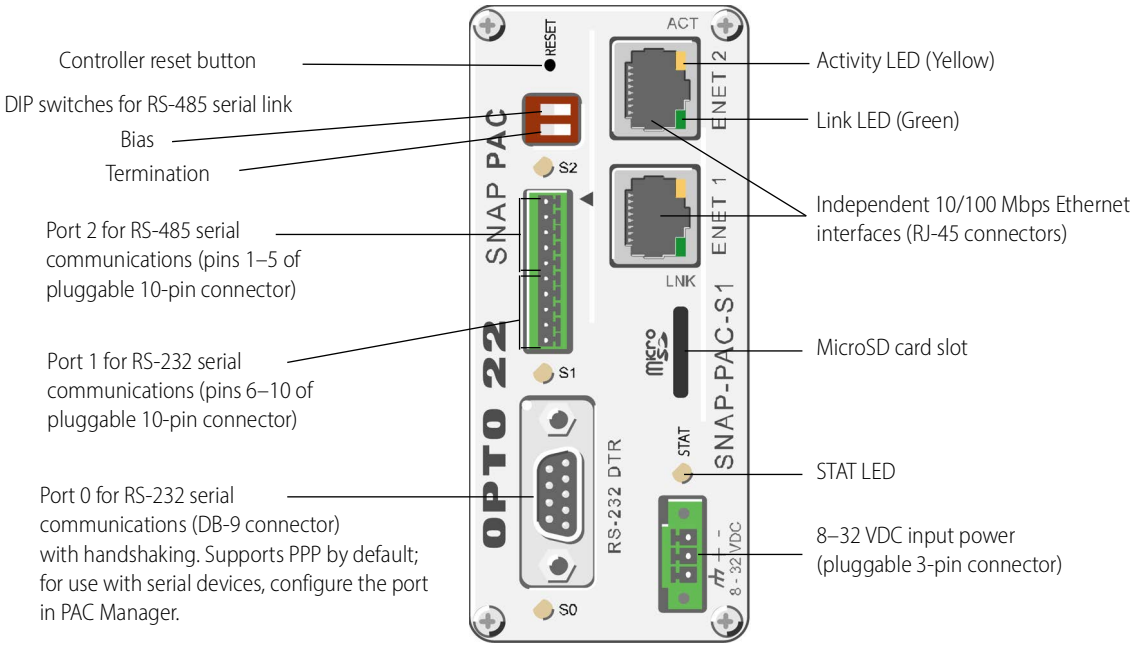

Status and Activity LEDs

Indicator	Description
S0	RS-232 serial activity on port 0
S1	RS-232 serial activity on port 1
S2	RS-485 serial activity
STAT	Startup status and control program operational status
ACT	Ethernet network activity
LINK	Link established with Ethernet network

Port 0 for RS-232 serial (DB-9 connector)

Pin	Description	Signal Direction
1	DCD	In
2	RX	In
3	TX	Out
4	DTR	Out
5	COM	
6	DSR	In
7	RTS	Out
8	CTS	In
9	RI*	In

* RI signal does not occur on PACs with a microSD card slot

Ports 1 and 2 for RS-485 and RS-232 serial

	Pin	Description	Signal Direction
Port 2 for RS-485 serial (2-Wire)	1	TX/RX+	In/Out
	2	TX/RX–	In/Out
	3	SIG COM*	
	4	IRQ+	In
	5	IRQ–	In
Port 1 for RS-232 serial	6	TX	Out
	7	RX	In
	8	GND	
	9	RTS	Out
	10	CTS	In

* Isolated ground

© 2005–2026 Opto 22. All rights reserved. Dimensions and specifications are subject to change. Brand or product names used herein are trademarks or registered trademarks of their respective companies or organizations.

DIMENSIONAL DRAWINGS

SNAP-PAC-S1 Panel Mounting and Dimensions

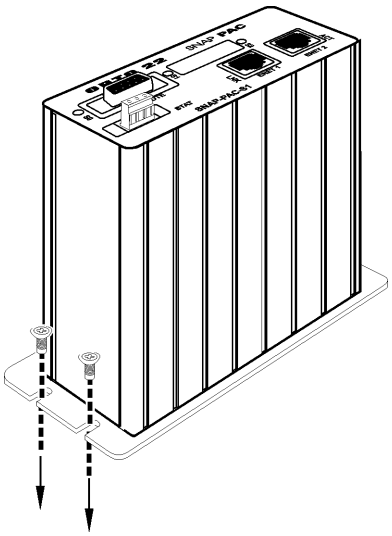

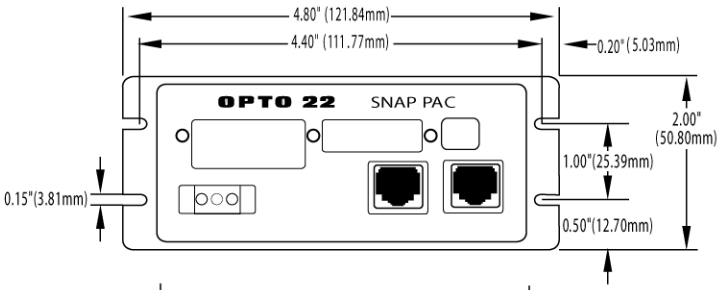

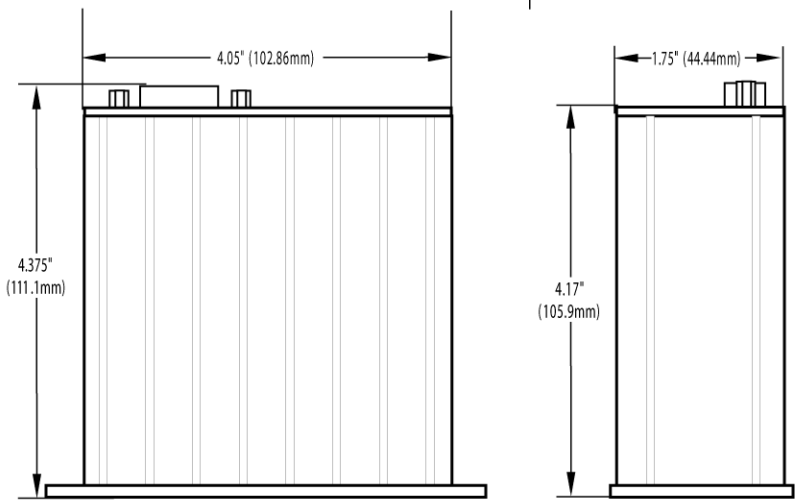

© 2005–2026 Opto 22. All rights reserved. Dimensions and specifications are subject to change. Brand or product names used herein are trademarks or registered trademarks of their respective companies or organizations.

DIMENSIONAL DRAWINGS (CONTINUED)

SNAP-PAC-S1 DIN-Rail Mounting and Dimensions

Requires a SNAP-PSDIN adapter (purchased separately).

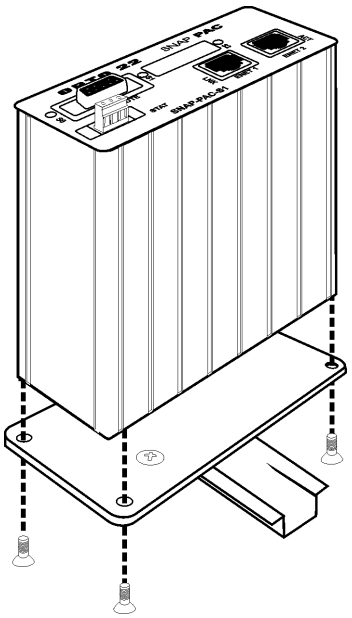

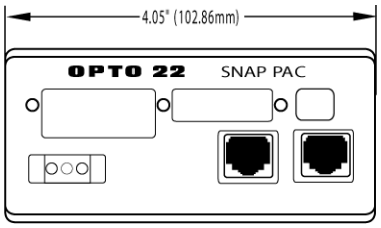

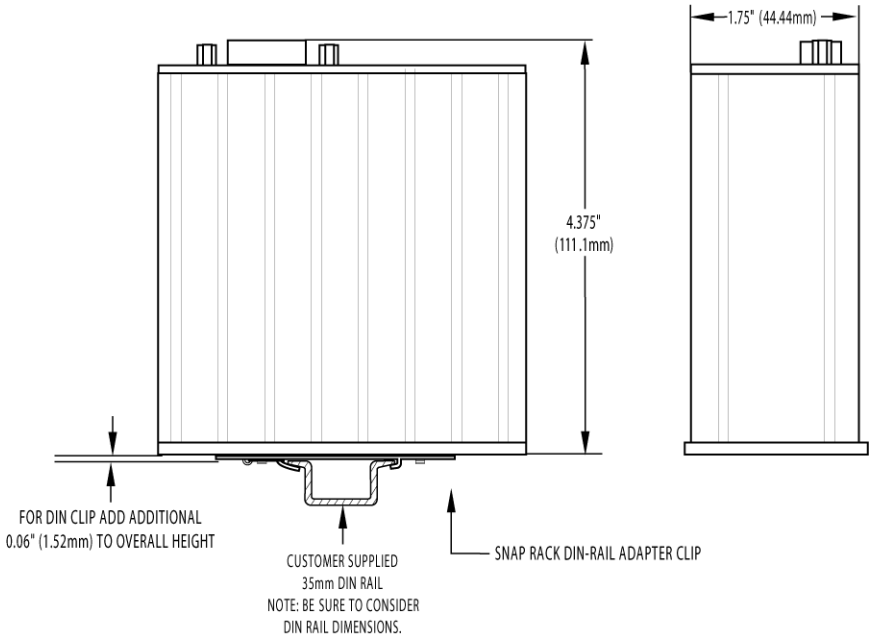

© 2005–2026 Opto 22. All rights reserved. Dimensions and specifications are subject to change. Brand or product names used herein are trademarks or registered trademarks of their respective companies or organizations.